STRATA PLAN OF LOT 1
DISTRICT LOT 124 GROUP 1
NEW WESTMINSTER DISTRICT PLAN EPP56498

CITY OF BURNABY

BCGS 92G.026

'HILLSIDE WEST'

CIVIC ADDRESSES:
TOWER 1 – 4720 LOUGHEED HIGHWAY
TOWER 2 – 4730 LOUGHEED HIGHWAY
BURNABY, BC

0 10 30 60

SCALE 1 : 600 DISTANCES ARE IN METRES

THE INTENDED PLOT SCALE OF THIS PLAN IS 560 mm IN WIDTH BY 432 mm IN HEIGHT (C SIZE) WHEN PLOTTED AT A SCALE OF 1:600.

INTEGRATED SURVEY AREA No. 25, BURNABY
NAD83(CSRS) 4.0.0.BC.1.MVRD

GRID BEARINGS ARE DERIVED FROM OBSERVATIONS BETWEEN GEODETIC CONTROL MONUMENTS 82H5076 AND 82H5053 AND ARE REFERRED TO CENTRAL MERIDIAN OF UTM ZONE 10.

THE UTM COORDINATES AND ESTIMATED ABSOLUTE ACCURACY ACHIEVED ARE DERIVED FROM THE MASCOT PUBLISHED COORDINATES FOR GEODETIC CONTROL MONUMENTS 82H5076 AND 82H5053.

THIS PLAN SHOWS HORIZONTAL GROUND-LEVEL DISTANCES, UNLESS OTHERWISE SPECIFIED. TO COMPUTE GRID DISTANCES, MULTIPLY GROUND-LEVEL DISTANCES BY THE AVERAGE COMBINED FACTOR OF 0.9995997 WHICH HAS BEEN DERIVED FROM GEODETIC CONTROL MONUMENTS 82H5076 AND 82H5053.

NAD83 (CSRS) 4.0.0.BC.1.MVRD UTM ZONE 10 COORDINATES			
TABLET MARKING	NORTHING	EASTING	ABSOLUTE ACCURACY
82H5076	5456637.789 m	499751.455 m	0.01 m
82H5053	5456583.460 m	501045.428 m	0.01 m

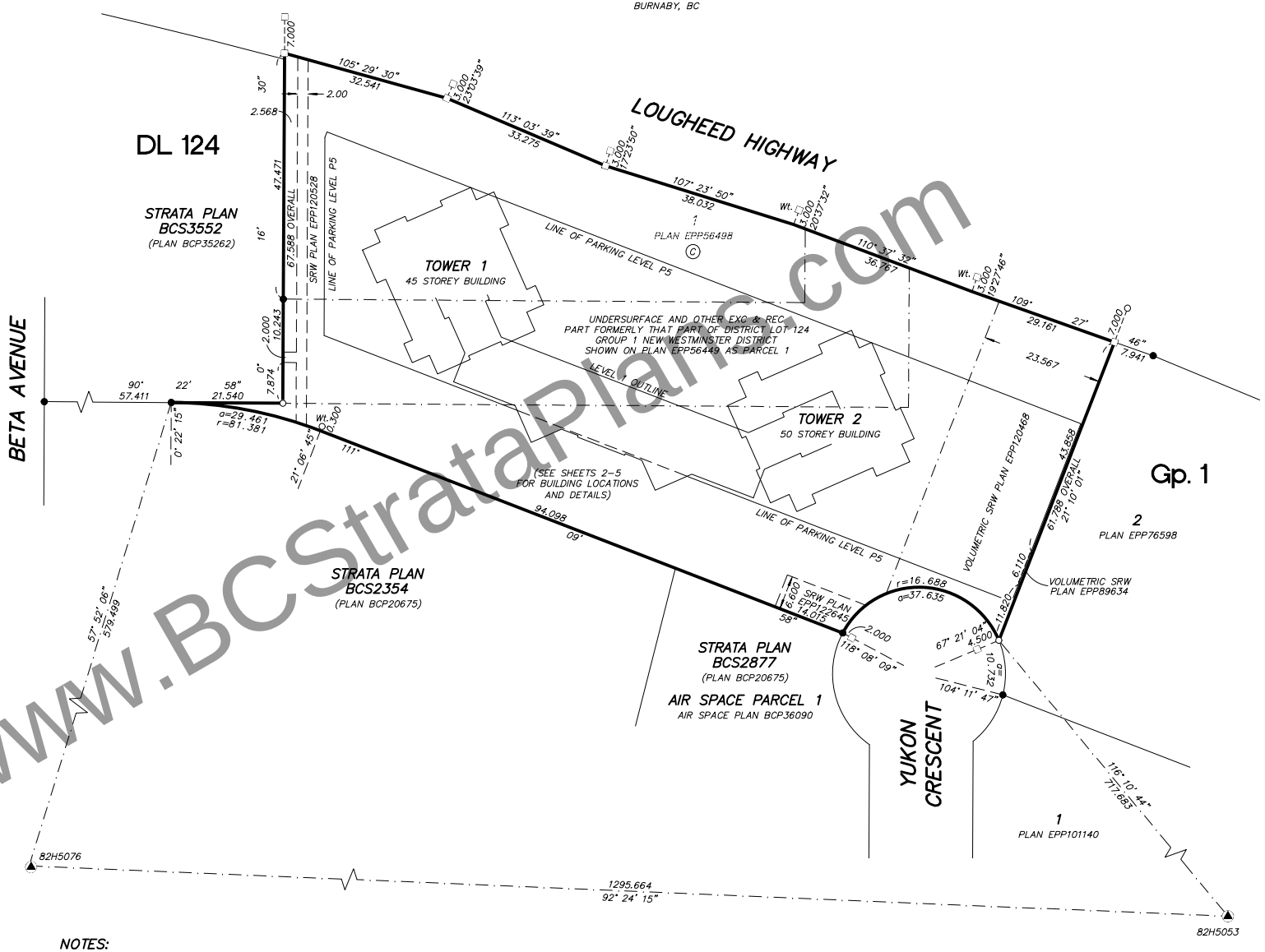

LEGEND

FOUND PLACED

▲	DENOTES CONTROL MONUMENT
□	DENOTES LEAD PLUG
● ○	DENOTES STANDARD IRON POST
Ex.	DENOTES EXPLANATORY
Wt.	DENOTES WITNESS
m²	DENOTES SQUARE METRES
SL	DENOTES STRATA LOT
PT	DENOTES PART
T	DENOTES TOTAL
LCP	DENOTES LIMITED COMMON PROPERTY
IF	DENOTES INSIDE FACE
(C)	DENOTES COMMON PROPERTY
(E)	DENOTES ELECTRICAL ROOM BEING COMMON PROPERTY
(M)	DENOTES MECHANICAL ROOM BEING COMMON PROPERTY
(V)	DENOTES VESTIBULE BEING COMMON PROPERTY
(D)	DENOTES DUCT BEING COMMON PROPERTY
(S)	DENOTES STAIRS BEING COMMON PROPERTY
(EL)	DENOTES ELEVATOR BEING COMMON PROPERTY
(PL)	DENOTES PLANTER BEING COMMON PROPERTY
(RD-420)	DENOTES ROOF DECK BEING LIMITED COMMON PROPERTY FOR THE EXCLUSIVE USE OF STRATA LOT 420 (TYPICAL)
(B-1)	DENOTES BALCONY BEING LIMITED COMMON PROPERTY FOR THE EXCLUSIVE USE OF STRATA LOT 1 (TYPICAL)

NOTE:
THIS PLAN SHOWS ONE OR MORE WITNESS POSTS WHICH ARE NOT SET ON THE TRUE CORNER(S).

WITNESS POSTS ARE ON THE PRODUCTION OF PROPERTY LINES UNLESS OTHERWISE NOTED

THE FIELD SURVEY REPRESENTED BY THIS PLAN WAS COMPLETED ON THE 16th DAY OF SEPTEMBER, 2022
JESSE MORIN, BCLS (880)
ECR#: 264903

NOTES:

THE BUILDINGS SHOWN HEREON ARE WITHIN THE EXTERNAL BOUNDARIES OF THE LAND THAT IS THE SUBJECT OF THE STRATA PLAN

THE BUILDINGS INCLUDED IN THIS STRATA PLAN HAVE NOT BEEN PREVIOUSLY OCCUPIED

ALL ANGLES ARE MULTIPLES OF 45° OR 90° UNLESS OTHERWISE NOTED

NOTICE UNDER SECTION 68 OF THE STRATA PROPERTY ACT. STRATA LOT BOUNDARIES ARE DEFINED AS THE EXTERIOR FACE OF EXTERIOR WALLS, THE EXTERIOR FACE OF INTERIOR WALLS ADJOINING COMMON AREAS, AND THE CENTRE LINE OF DEMISING WALLS BETWEEN STRATA LOTS.

LCP AREAS ARE DEFINED AS TO HEIGHT BY THE CENTRE OF THE FLOOR ABOVE OR ITS EXTENSION OR WHERE THERE IS NO FLOOR ABOVE, BY THE AVERAGE HEIGHT OF A STRATA LOT WITHIN THE SAME BUILDING, UNLESS OTHERWISE NOTED

THIS PLAN LIES WITHIN THE METRO VANCOUVER REGIONAL DISTRICT

BUTLER SUNDVICK
4 – 19089 94th Ave
Surrey, BC V4N 3S4
www.butlersundvick.ca
Tel. 604-513-9611

File: 4772\Strata\Final
Dwg: 4772-FS

www.BCStrataPlan.com

BUILDING LOCATIONS AND DETAILS

0 5 15 30

SCALE 1 : 300 DISTANCES ARE IN METRES

THE INTENDED PLOT SCALE OF THIS PLAN IS
560 mm IN WIDTH BY 432 mm IN HEIGHT (C SIZE)
WHEN PLOTTED AT A SCALE OF 1:300.

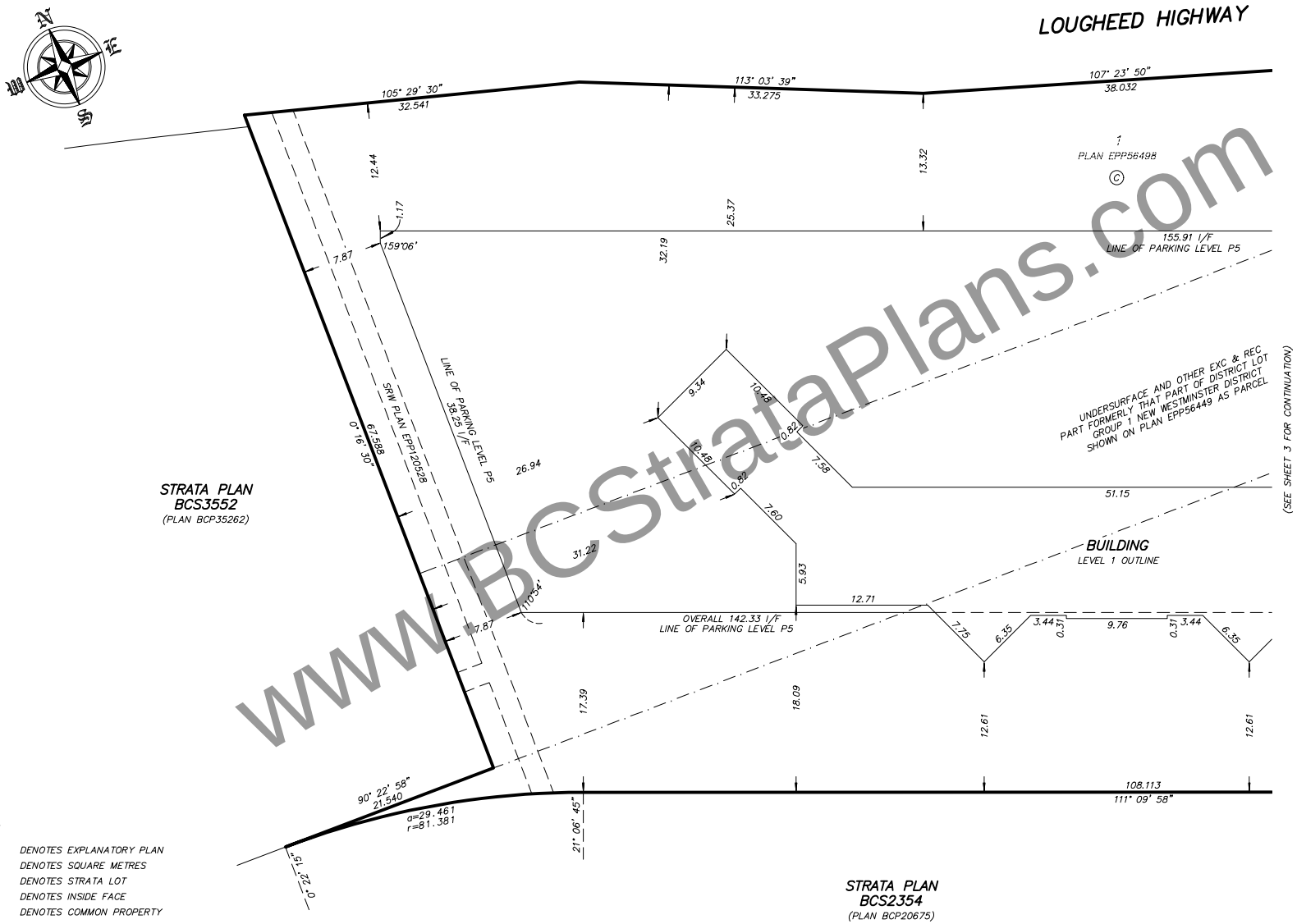

www.BCStrataPlans.com

LEGEND

Ex.	DENOTES EXPLANATORY PLAN
m²	DENOTES SQUARE METRES
SL	DENOTES STRATA LOT
IF	DENOTES INSIDE FACE
(C)	DENOTES COMMON PROPERTY
(E)	DENOTES ELECTRICAL ROOM BEING COMMON PROPERTY
(M)	DENOTES MECHANICAL ROOM BEING COMMON PROPERTY
(V)	DENOTES VESTIBULE BEING COMMON PROPERTY
(D)	DENOTES DUCT BEING COMMON PROPERTY
(S)	DENOTES STAIRS BEING COMMON PROPERTY
(EL)	DENOTES ELEVATOR BEING COMMON PROPERTY

SECTION ARROWS POINT IN THE DIRECTION OF VIEW
OFFSETS ARE PERPENDICULAR TO PROPERTY LINES

BUTLER SUNDVICK

JESSE MORIN, BCLS
Date: SEPTEMBER 16, 2022
File: 4772\Strata\Final
Dwg: 4772-FS

STRATA PLAN EPS8443

BUILDING LOCATIONS AND DETAILS

0 5 15 30

SCALE 1 : 300 DISTANCES ARE IN METRES

THE INTENDED PLOT SCALE OF THIS PLAN IS 560 mm IN WIDTH BY 432 mm IN HEIGHT (C SIZE) WHEN PLOTTED AT A SCALE OF 1:300.

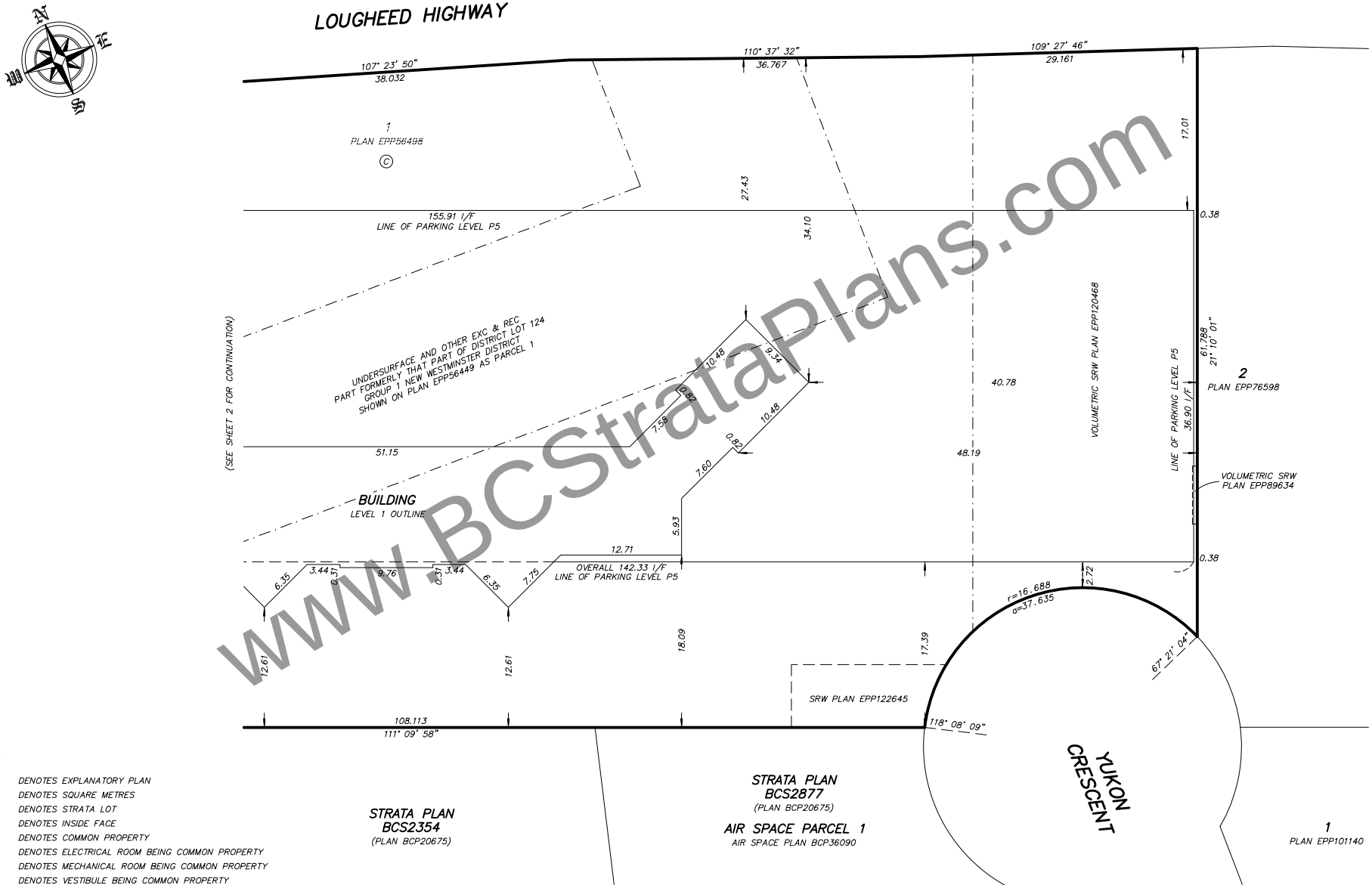

www.BCStrataPlans.com

LEGEND

Ex.	DENOTES EXPLANATORY PLAN
m²	DENOTES SQUARE METRES
SL	DENOTES STRATA LOT
IF	DENOTES INSIDE FACE
(C)	DENOTES COMMON PROPERTY
(E)	DENOTES ELECTRICAL ROOM BEING COMMON PROPERTY
(M)	DENOTES MECHANICAL ROOM BEING COMMON PROPERTY
(V)	DENOTES VESTIBULE BEING COMMON PROPERTY
(D)	DENOTES DUCT BEING COMMON PROPERTY
(S)	DENOTES STAIRS BEING COMMON PROPERTY
(EL)	DENOTES ELEVATOR BEING COMMON PROPERTY

SECTION ARROWS POINT IN THE DIRECTION OF VIEW
OFFSETS ARE PERPENDICULAR TO PROPERTY LINES

BUTLER SUNDVICK

JESSE MORIN, BCLS
Date: SEPTEMBER 16, 2022
File: 4772\Strata\Final
Dwg: 4772-FS

STRATA PLAN EPS8443

BUILDING LOCATIONS AND DETAILS

0 5 15 30

SCALE 1 : 300 DISTANCES ARE IN METRES

THE INTENDED PLOT SCALE OF THIS PLAN IS
560 mm IN WIDTH BY 432 mm IN HEIGHT (C SIZE)
WHEN PLOTTED AT A SCALE OF 1:300.

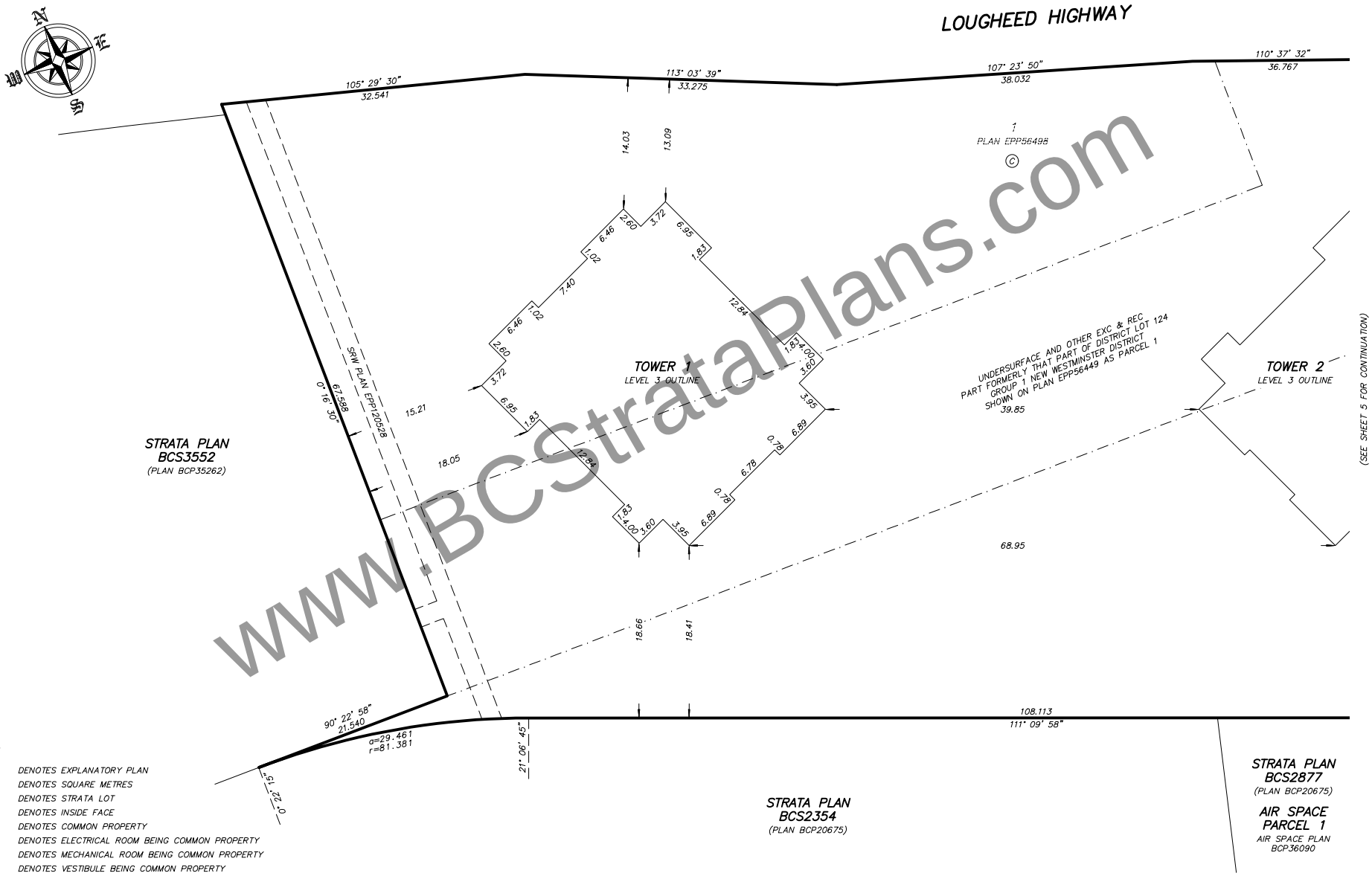

www.BCStrataPlans.com

LEGEND

Ex.	DENOTES EXPLANATORY PLAN
m²	DENOTES SQUARE METRES
SL	DENOTES STRATA LOT
IF	DENOTES INSIDE FACE
C	DENOTES COMMON PROPERTY
E	DENOTES ELECTRICAL ROOM BEING COMMON PROPERTY
M	DENOTES MECHANICAL ROOM BEING COMMON PROPERTY
V	DENOTES VESTIBULE BEING COMMON PROPERTY
D	DENOTES DUCT BEING COMMON PROPERTY
S	DENOTES STAIRS BEING COMMON PROPERTY
EL	DENOTES ELEVATOR BEING COMMON PROPERTY

SECTION ARROWS POINT IN THE DIRECTION OF VIEW
OFFSETS ARE PERPENDICULAR TO PROPERTY LINES

BUTLER SUNDVICK

JESSE MORIN, BCLS
Date: SEPTEMBER 16, 2022
File: 4772\Strata\Final
Dwg: 4772-FS

STRATA PLAN EPS8443

BUILDING LOCATIONS AND DETAILS

0 5 15 30

SCALE 1 : 300 DISTANCES ARE IN METRES

THE INTENDED PLOT SCALE OF THIS PLAN IS
560 mm IN WIDTH BY 432 mm IN HEIGHT (C SIZE)
WHEN PLOTTED AT A SCALE OF 1:300.

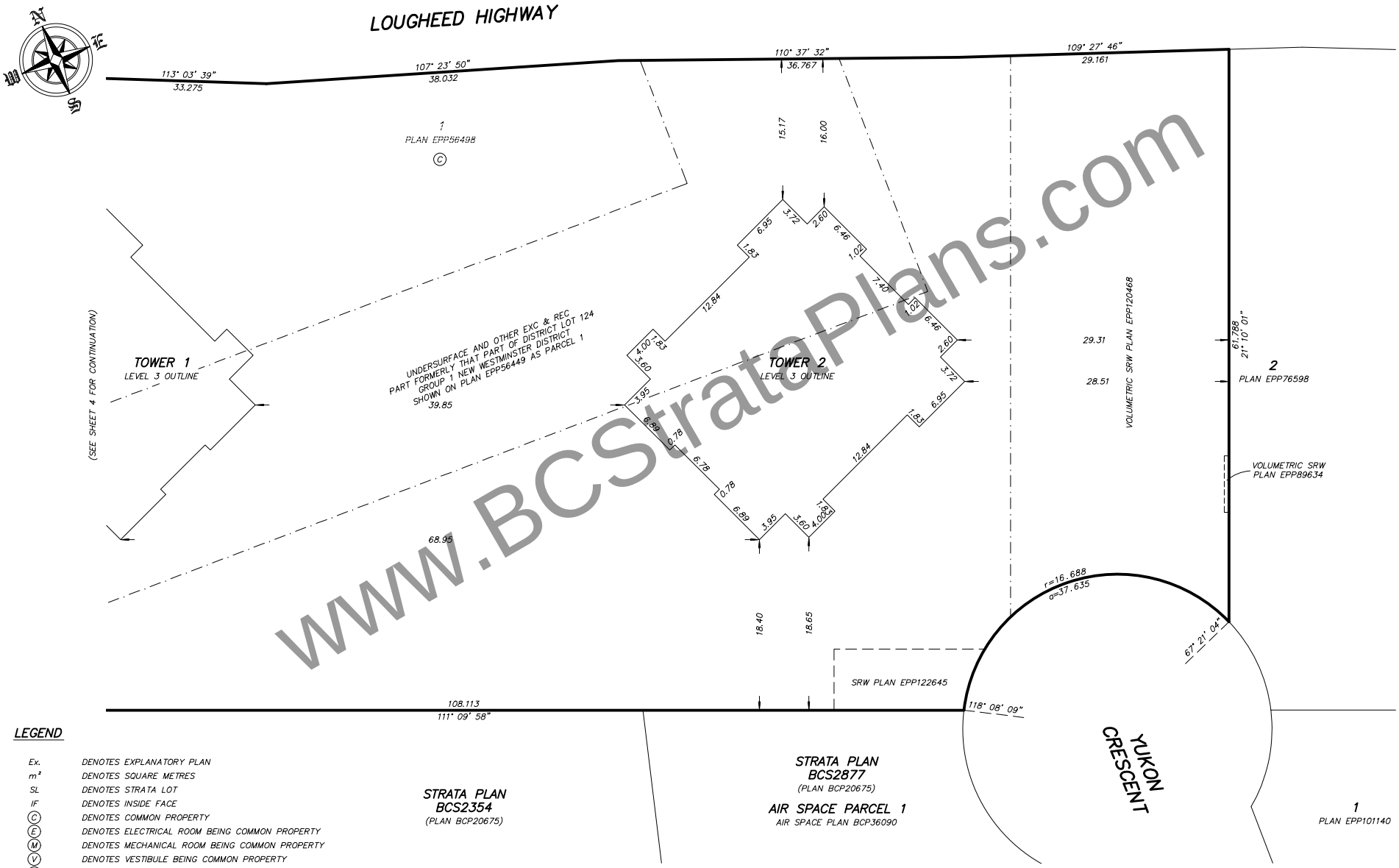

www.BCStrataPlans.com

LEGEND

Ex.	DENOTES EXPLANATORY PLAN
m²	DENOTES SQUARE METRES
SL	DENOTES STRATA LOT
IF	DENOTES INSIDE FACE
(C)	DENOTES COMMON PROPERTY
(E)	DENOTES ELECTRICAL ROOM BEING COMMON PROPERTY
(M)	DENOTES MECHANICAL ROOM BEING COMMON PROPERTY
(V)	DENOTES VESTIBULE BEING COMMON PROPERTY
(D)	DENOTES DUCT BEING COMMON PROPERTY
(S)	DENOTES STAIRS BEING COMMON PROPERTY
(EL)	DENOTES ELEVATOR BEING COMMON PROPERTY

SECTION ARROWS POINT IN THE DIRECTION OF VIEW
OFFSETS ARE PERPENDICULAR TO PROPERTY LINES

BUTLER SUNDVICK

JESSE MORIN, BCLS
Date: SEPTEMBER 16, 2022
File: 4772\Strata\Final
Dwg: 4772-FS

STRATA PLAN EPS8443

PARKING LEVEL P9

0 5 10 20

SCALE 1 : 200 DISTANCES ARE IN METRES

THE INTENDED PLOT SCALE OF THIS PLAN IS
560 mm IN WIDTH BY 432 mm IN HEIGHT (C SIZE)
WHEN PLOTTED AT A SCALE OF 1:200.

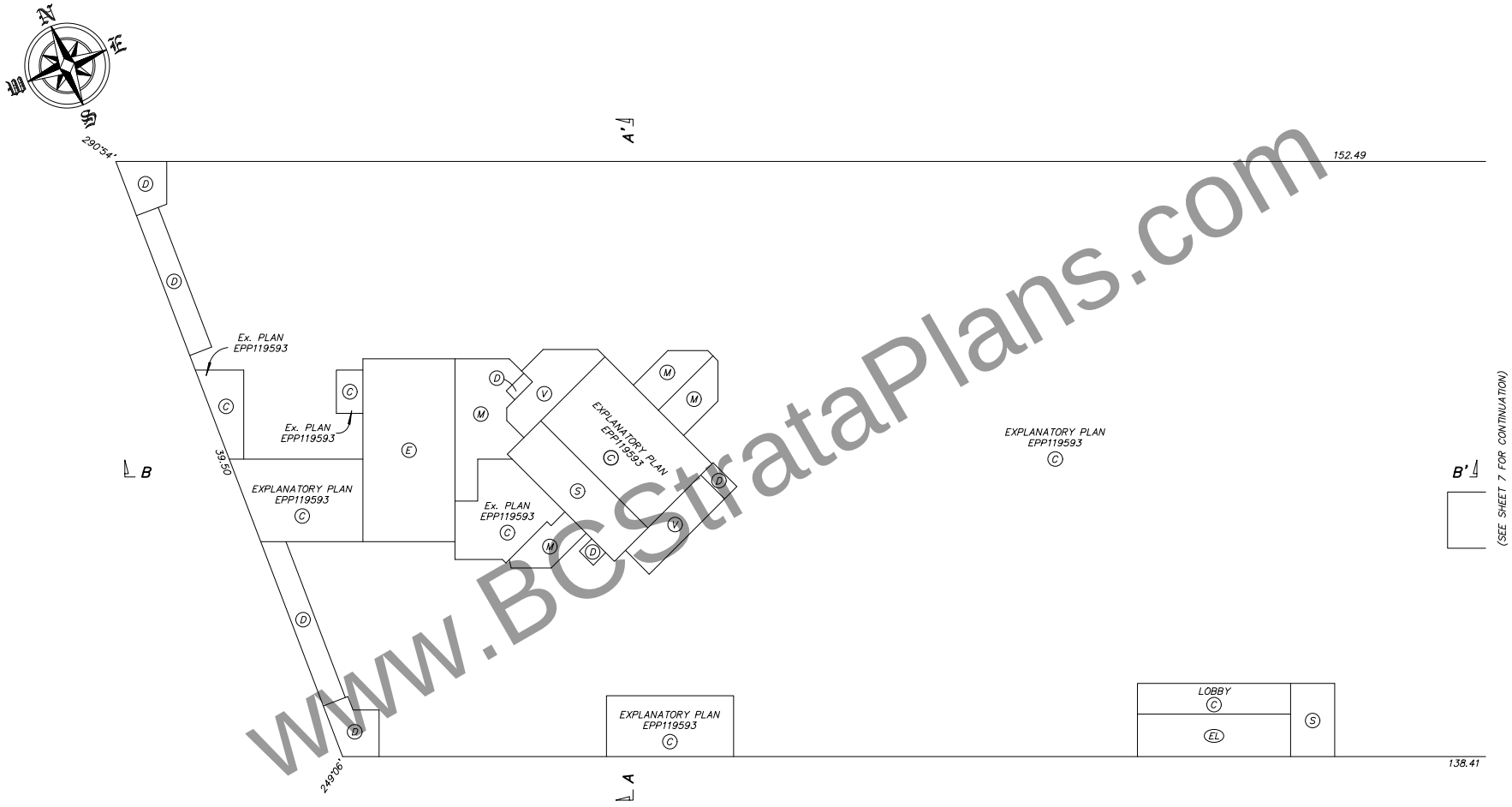

www.BCStrataPlans.com

LEGEND

Ex.	DENOTES EXPLANATORY PLAN
m²	DENOTES SQUARE METRES
SL	DENOTES STRATA LOT
IF	DENOTES INSIDE FACE
(C)	DENOTES COMMON PROPERTY
(E)	DENOTES ELECTRICAL ROOM BEING COMMON PROPERTY
(M)	DENOTES MECHANICAL ROOM BEING COMMON PROPERTY
(V)	DENOTES VESTIBULE BEING COMMON PROPERTY
(D)	DENOTES DUCT BEING COMMON PROPERTY
(S)	DENOTES STAIRS BEING COMMON PROPERTY
(EL)	DENOTES ELEVATOR BEING COMMON PROPERTY

SECTION ARROWS POINT IN THE DIRECTION OF VIEW

BUTLER SUNDVICK

JESSE MORIN, BCLS
Date: SEPTEMBER 16, 2022
File: 4772\Strata\Final
Dwg: 4772-FS

STRATA PLAN EPS8443

PARKING LEVEL P9

0 5 10 20

SCALE 1 : 200 DISTANCES ARE IN METRES

THE INTENDED PLOT SCALE OF THIS PLAN IS
560 mm IN WIDTH BY 432 mm IN HEIGHT (C SIZE)
WHEN PLOTTED AT A SCALE OF 1:200.

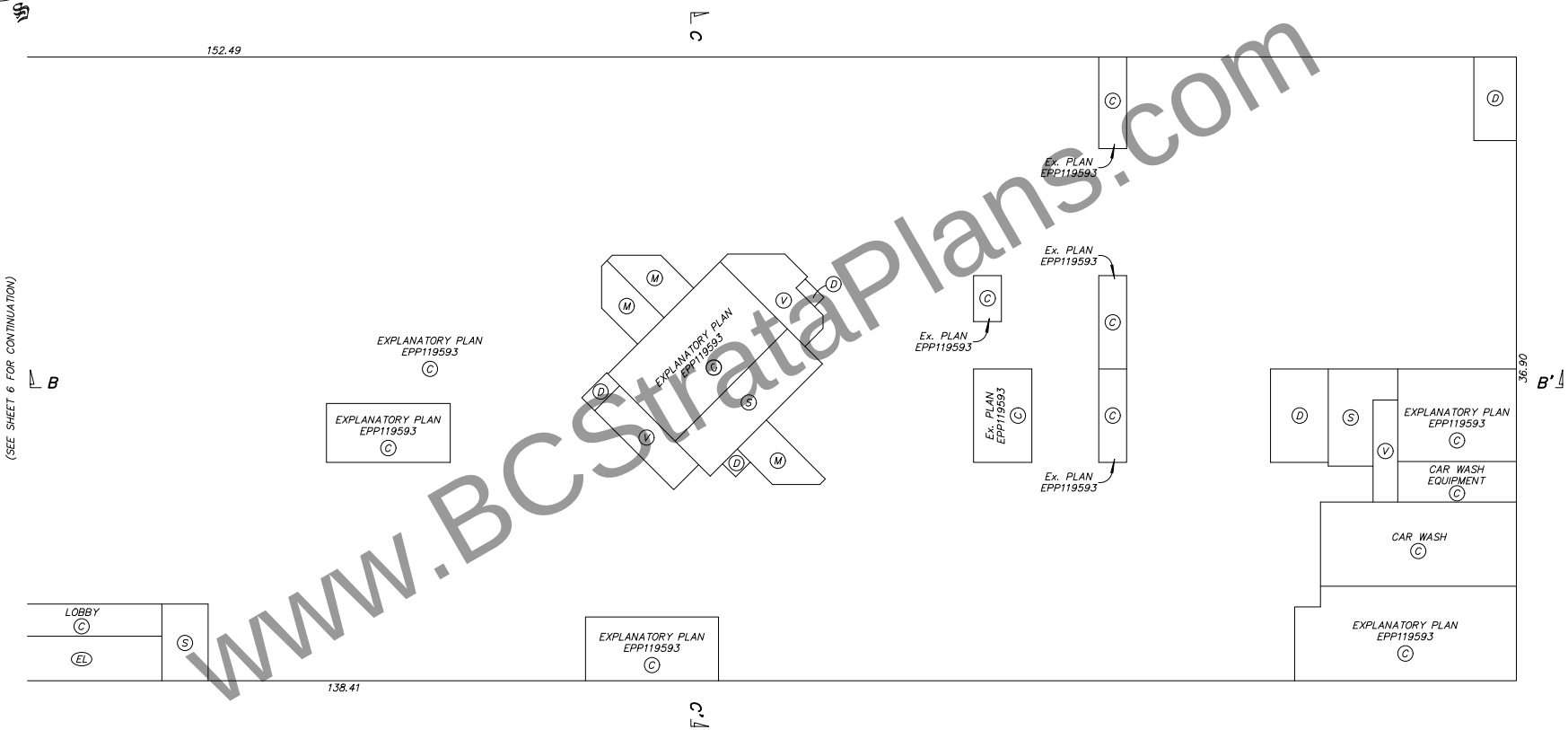

www.BCStrataPlans.com

LEGEND

Ex.	DENOTES EXPLANATORY PLAN
m²	DENOTES SQUARE METRES
SL	DENOTES STRATA LOT
IF	DENOTES INSIDE FACE
(C)	DENOTES COMMON PROPERTY
(E)	DENOTES ELECTRICAL ROOM BEING COMMON PROPERTY
(M)	DENOTES MECHANICAL ROOM BEING COMMON PROPERTY
(V)	DENOTES VESTIBULE BEING COMMON PROPERTY
(D)	DENOTES DUCT BEING COMMON PROPERTY
(S)	DENOTES STAIRS BEING COMMON PROPERTY
(EL)	DENOTES ELEVATOR BEING COMMON PROPERTY

SECTION ARROWS POINT IN THE DIRECTION OF VIEW

BUTLER SUNDVICK

JESSE MORIN, BCLS
Date: SEPTEMBER 16, 2022
File: 4772\Strata\Final
Dwg: 4772-FS

PARKING LEVEL P8

0 5 10 20

SCALE 1 : 200 DISTANCES ARE IN METRES

THE INTENDED PLOT SCALE OF THIS PLAN IS
560 mm IN WIDTH BY 432 mm IN HEIGHT (C SIZE)
WHEN PLOTTED AT A SCALE OF 1:200.

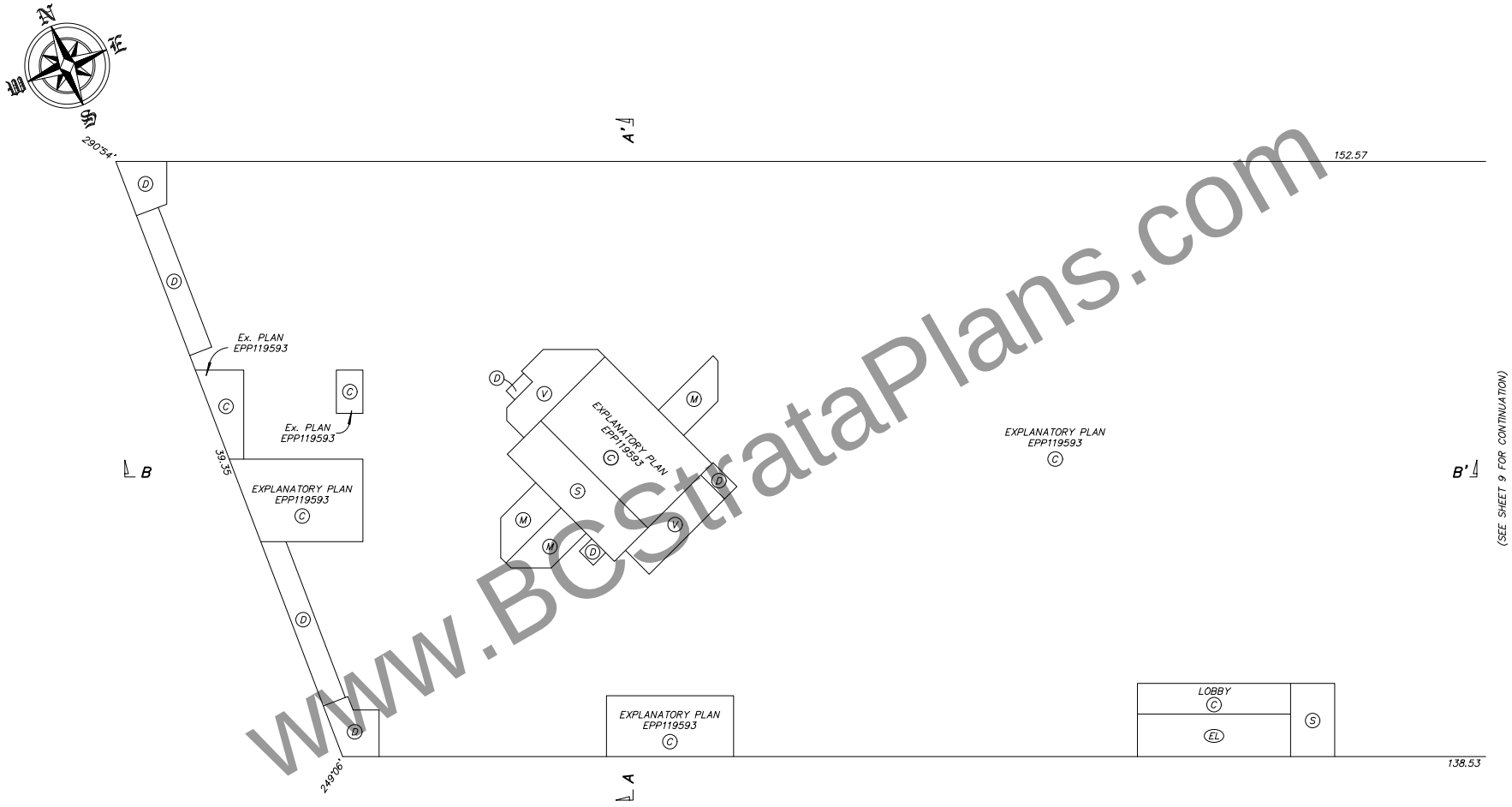

www.BCStrataPlans.com

LEGEND

Ex.	DENOTES EXPLANATORY PLAN
m²	DENOTES SQUARE METRES
SL	DENOTES STRATA LOT
IF	DENOTES INSIDE FACE
(C)	DENOTES COMMON PROPERTY
(E)	DENOTES ELECTRICAL ROOM BEING COMMON PROPERTY
(M)	DENOTES MECHANICAL ROOM BEING COMMON PROPERTY
(V)	DENOTES VESTIBULE BEING COMMON PROPERTY
(D)	DENOTES DUCT BEING COMMON PROPERTY
(S)	DENOTES STAIRS BEING COMMON PROPERTY
(EL)	DENOTES ELEVATOR BEING COMMON PROPERTY

SECTION ARROWS POINT IN THE DIRECTION OF VIEW

BUTLER SUNDVICK

JESSE MORIN, BCLS
Date: SEPTEMBER 16, 2022
File: 4772\Strata\Final
Dwg: 4772-FS

STRATA PLAN EPS8443

PARKING LEVEL P8

0 5 10 20

SCALE 1 : 200 DISTANCES ARE IN METRES

THE INTENDED PLOT SCALE OF THIS PLAN IS
560 mm IN WIDTH BY 432 mm IN HEIGHT (C SIZE)
WHEN PLOTTED AT A SCALE OF 1:200.

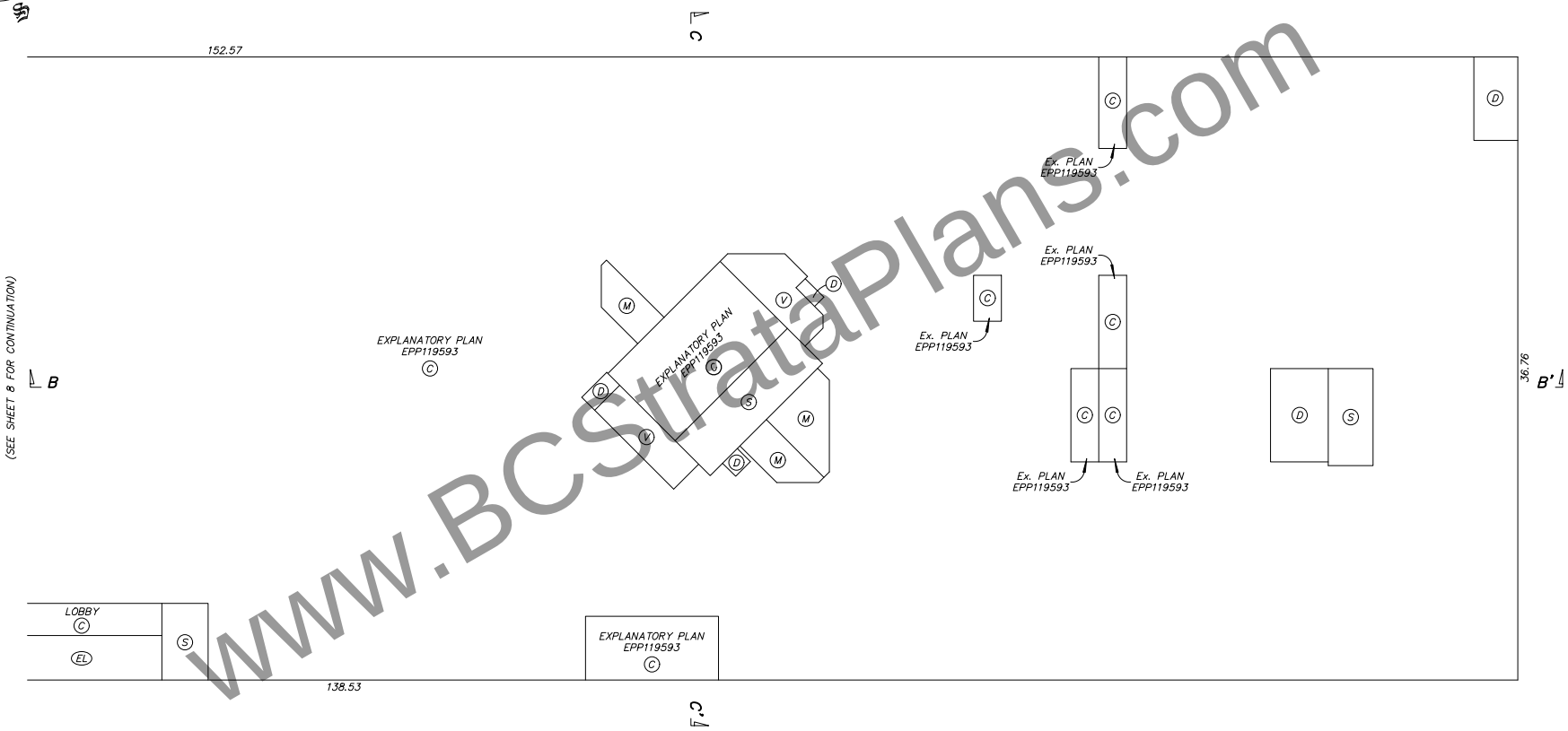

www.BCStrataPlans.com

LEGEND

Ex.	DENOTES EXPLANATORY PLAN
m²	DENOTES SQUARE METRES
SL	DENOTES STRATA LOT
IF	DENOTES INSIDE FACE
(C)	DENOTES COMMON PROPERTY
(E)	DENOTES ELECTRICAL ROOM BEING COMMON PROPERTY
(M)	DENOTES MECHANICAL ROOM BEING COMMON PROPERTY
(V)	DENOTES VESTIBULE BEING COMMON PROPERTY
(D)	DENOTES DUCT BEING COMMON PROPERTY
(S)	DENOTES STAIRS BEING COMMON PROPERTY
(EL)	DENOTES ELEVATOR BEING COMMON PROPERTY

SECTION ARROWS POINT IN THE DIRECTION OF VIEW

BUTLER SUNDVICK

JESSE MORIN, BCLS
Date: SEPTEMBER 16, 2022
File: 4772\Strata\Final
Dwg: 4772-FS

STRATA PLAN EPS8443

PARKING LEVEL P7

0 5 10 20

SCALE 1 : 200 DISTANCES ARE IN METRES

THE INTENDED PLOT SCALE OF THIS PLAN IS
560 mm IN WIDTH BY 432 mm IN HEIGHT (C SIZE)
WHEN PLOTTED AT A SCALE OF 1:200.

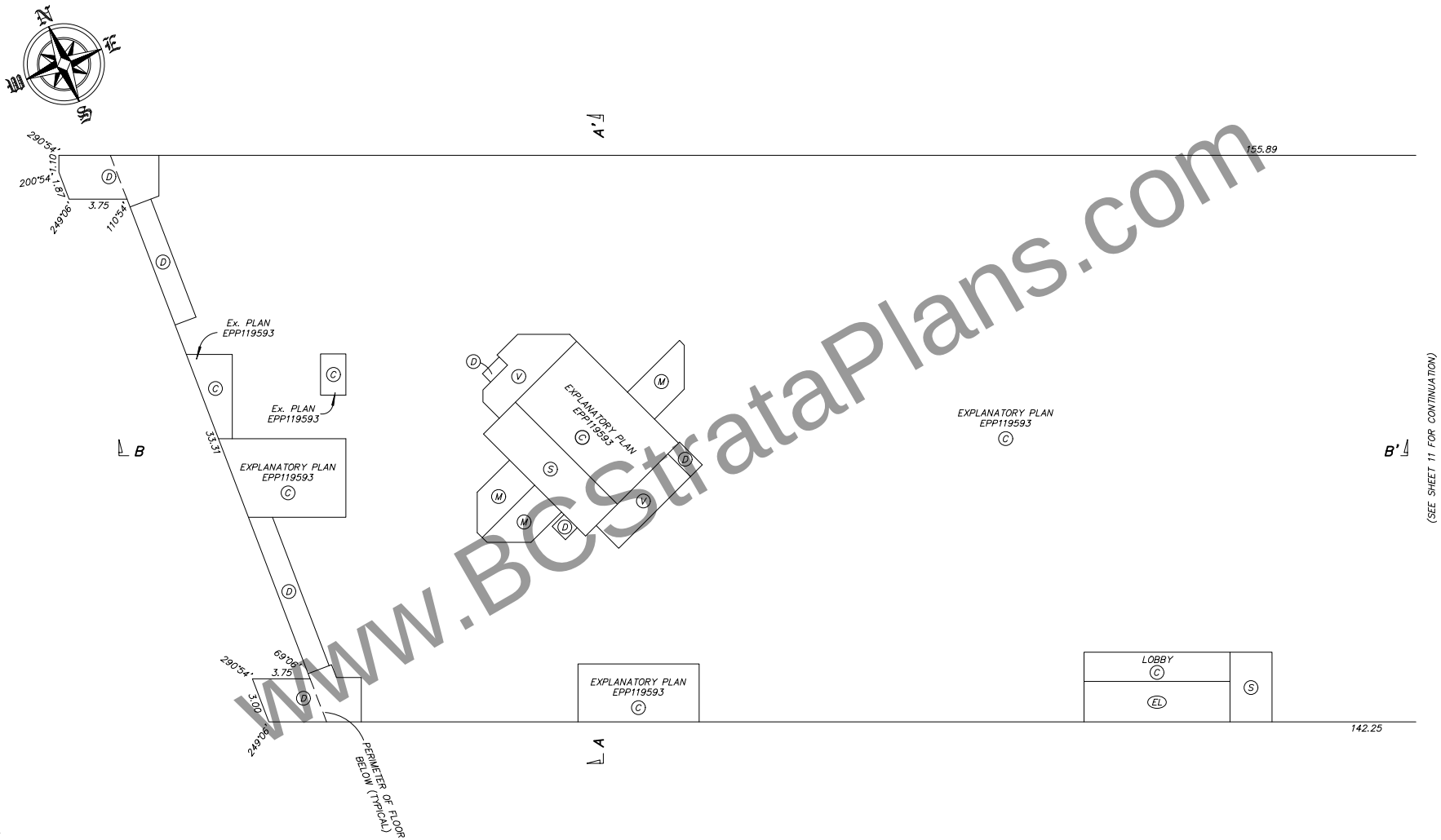

www.BCStrataPlans.com

LEGEND

Ex.	DENOTES EXPLANATORY PLAN
m²	DENOTES SQUARE METRES
SL	DENOTES STRATA LOT
IF	DENOTES INSIDE FACE
(C)	DENOTES COMMON PROPERTY
(E)	DENOTES ELECTRICAL ROOM BEING COMMON PROPERTY
(M)	DENOTES MECHANICAL ROOM BEING COMMON PROPERTY
(V)	DENOTES VESTIBULE BEING COMMON PROPERTY
(D)	DENOTES DUCT BEING COMMON PROPERTY
(S)	DENOTES STAIRS BEING COMMON PROPERTY
(EL)	DENOTES ELEVATOR BEING COMMON PROPERTY

SECTION ARROWS POINT IN THE DIRECTION OF VIEW

BUTLER SUNDVICK

JESSE MORIN, BCLS
Date: SEPTEMBER 16, 2022
File: 4772\Strata\Final
Dwg: 4772-FS

PARKING LEVEL P7

0 5 10 20

SCALE 1 : 200 DISTANCES ARE IN METRES

THE INTENDED PLOT SCALE OF THIS PLAN IS
560 mm IN WIDTH BY 432 mm IN HEIGHT (C SIZE)
WHEN PLOTTED AT A SCALE OF 1:200.

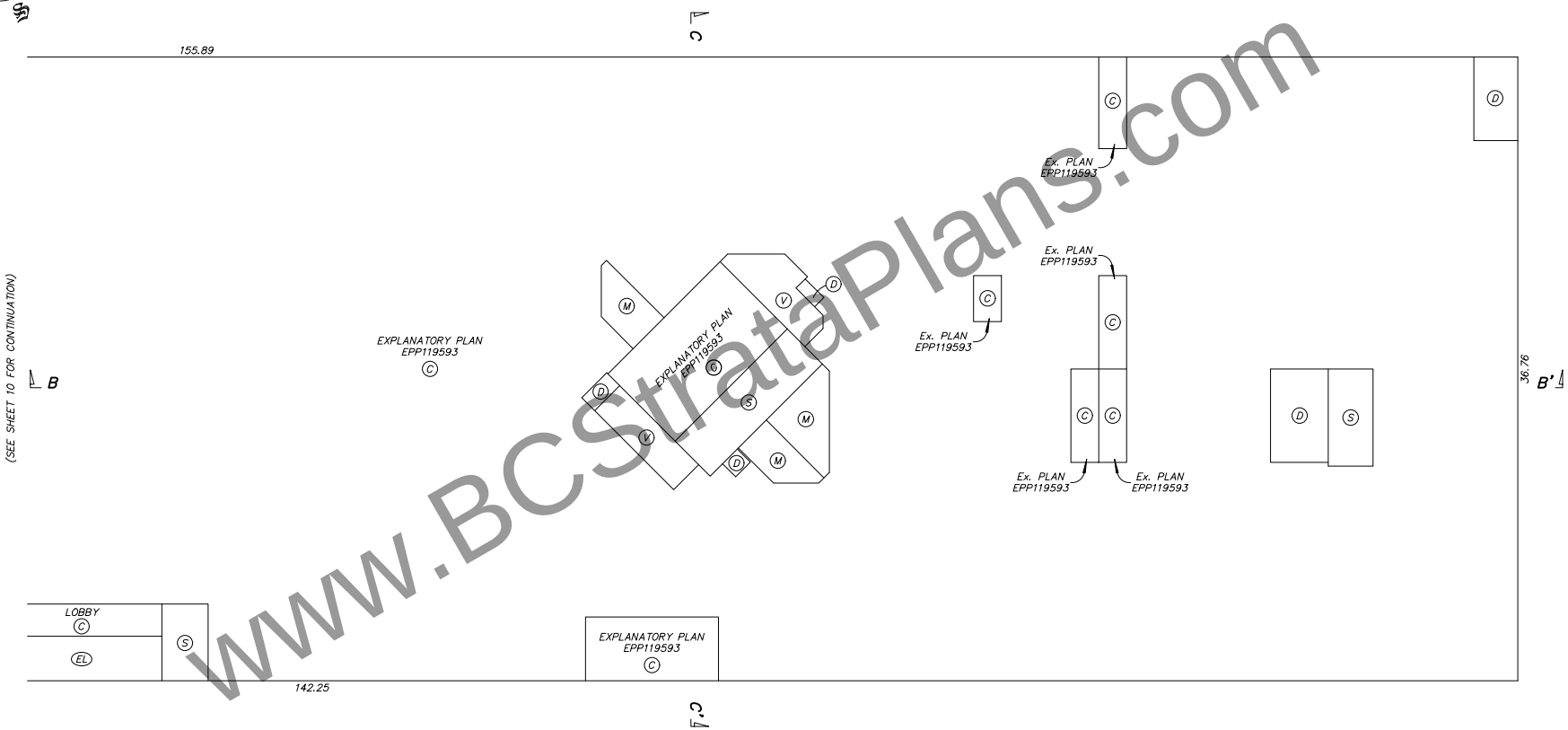

www.BCStrataPlans.com

LEGEND

Ex.	DENOTES EXPLANATORY PLAN
m²	DENOTES SQUARE METRES
SL	DENOTES STRATA LOT
IF	DENOTES INSIDE FACE
(C)	DENOTES COMMON PROPERTY
(E)	DENOTES ELECTRICAL ROOM BEING COMMON PROPERTY
(M)	DENOTES MECHANICAL ROOM BEING COMMON PROPERTY
(V)	DENOTES VESTIBULE BEING COMMON PROPERTY
(D)	DENOTES DUCT BEING COMMON PROPERTY
(S)	DENOTES STAIRS BEING COMMON PROPERTY
(EL)	DENOTES ELEVATOR BEING COMMON PROPERTY

SECTION ARROWS POINT IN THE DIRECTION OF VIEW

BUTLER SUNDVICK

JESSE MORIN, BCLS
Date: SEPTEMBER 16, 2022
File: 4772\Strata\Final
Dwg: 4772-FS

PARKING LEVEL P6

0 5 10 20

SCALE 1 : 200 DISTANCES ARE IN METRES

THE INTENDED PLOT SCALE OF THIS PLAN IS
560 mm IN WIDTH BY 432 mm IN HEIGHT (C SIZE)
WHEN PLOTTED AT A SCALE OF 1:200.

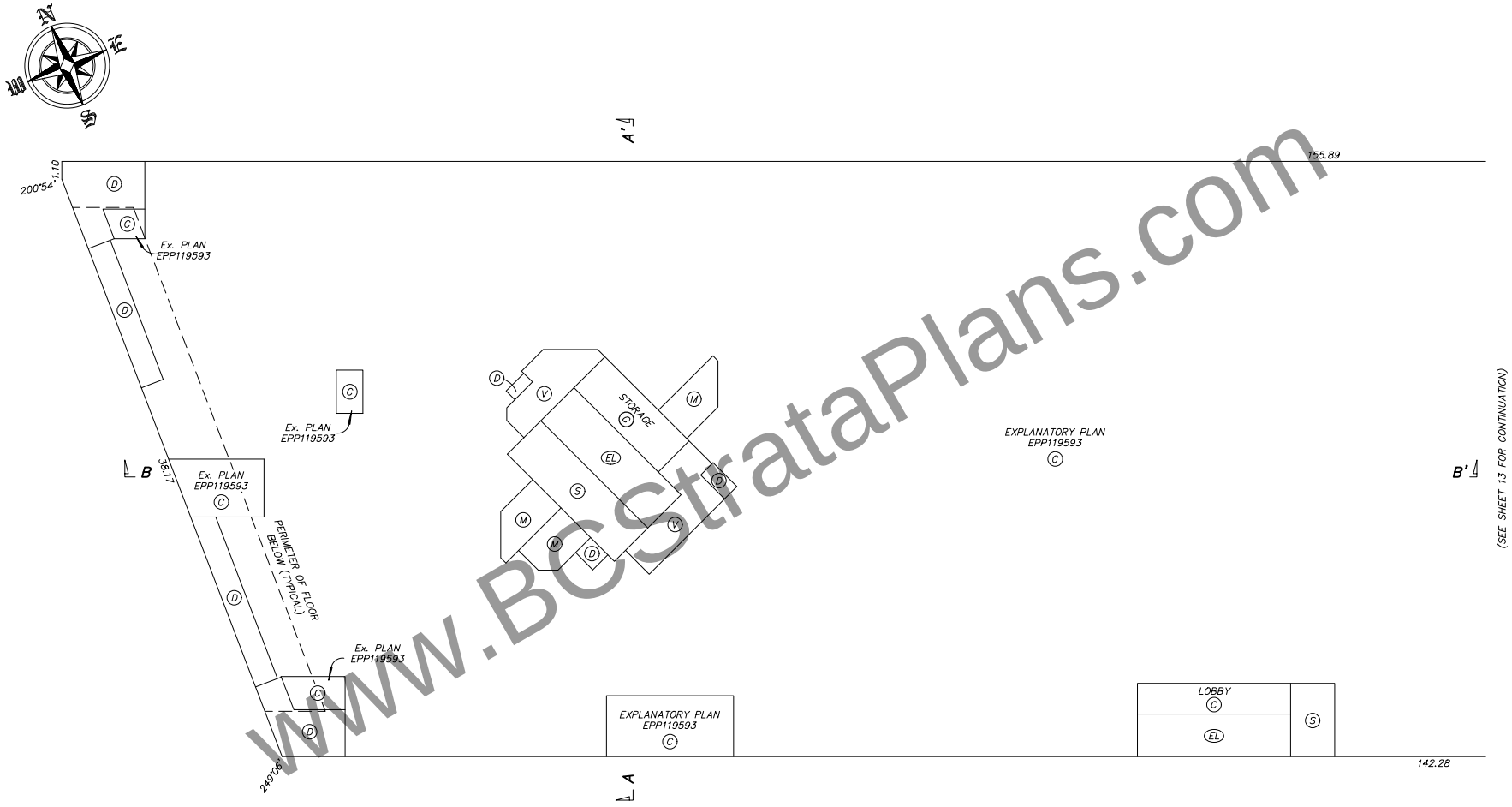

www.BCStrataPlans.com

LEGEND

Ex.	DENOTES EXPLANATORY PLAN
m²	DENOTES SQUARE METRES
SL	DENOTES STRATA LOT
IF	DENOTES INSIDE FACE
(C)	DENOTES COMMON PROPERTY
(E)	DENOTES ELECTRICAL ROOM BEING COMMON PROPERTY
(M)	DENOTES MECHANICAL ROOM BEING COMMON PROPERTY
(V)	DENOTES VESTIBULE BEING COMMON PROPERTY
(D)	DENOTES DUCT BEING COMMON PROPERTY
(S)	DENOTES STAIRS BEING COMMON PROPERTY
(EL)	DENOTES ELEVATOR BEING COMMON PROPERTY

SECTION ARROWS POINT IN THE DIRECTION OF VIEW

BUTLER SUNDVICK

JESSE MORIN, BCLS
Date: SEPTEMBER 16, 2022
File: 4772\Strata\Final
Dwg: 4772-FS

STRATA PLAN EPS8443

PARKING LEVEL P6

0 5 10 20

SCALE 1 : 200 DISTANCES ARE IN METRES

THE INTENDED PLOT SCALE OF THIS PLAN IS
560 mm IN WIDTH BY 432 mm IN HEIGHT (C SIZE)
WHEN PLOTTED AT A SCALE OF 1:200.

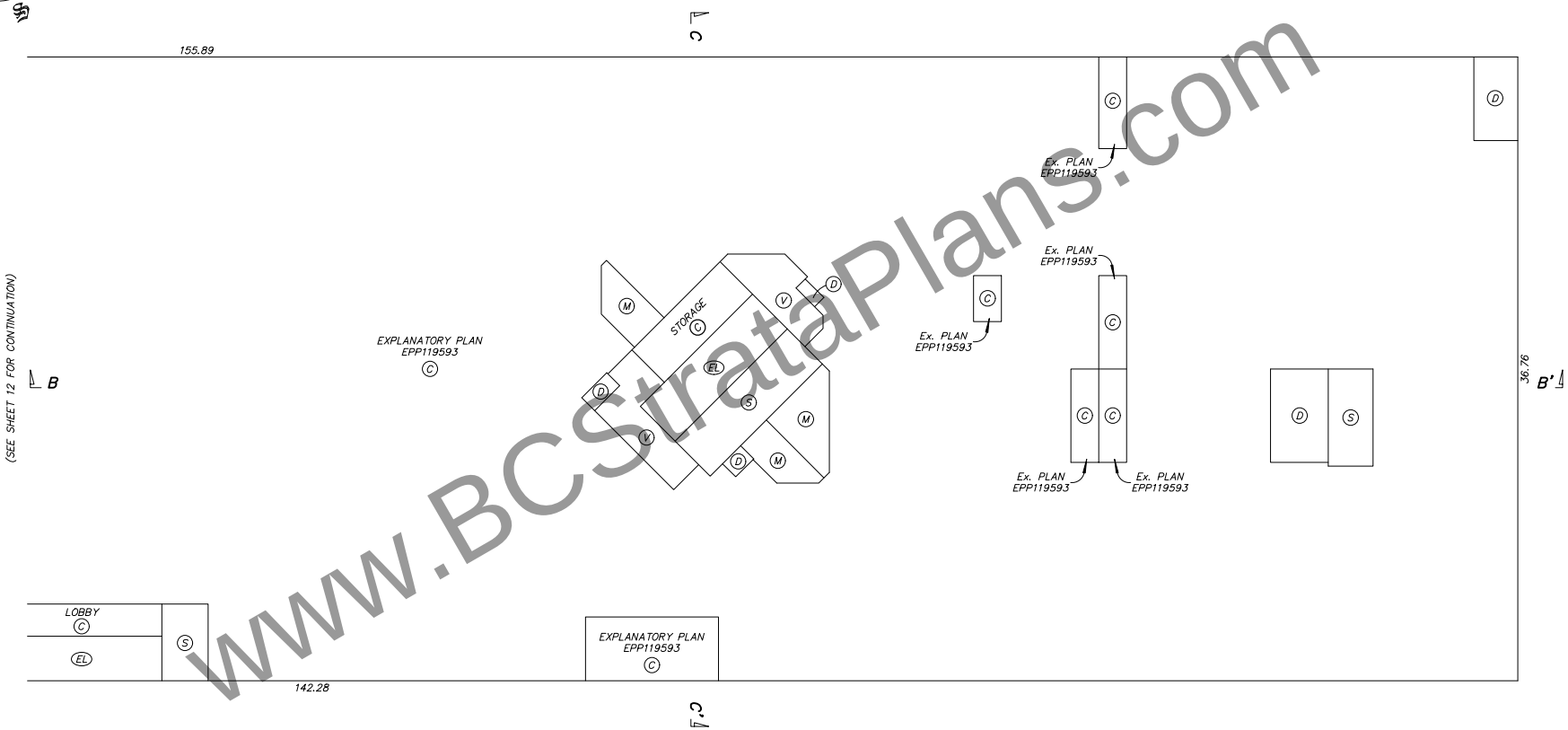

www.BCStrataPlans.com

LEGEND

Ex.	DENOTES EXPLANATORY PLAN
m²	DENOTES SQUARE METRES
SL	DENOTES STRATA LOT
IF	DENOTES INSIDE FACE
(C)	DENOTES COMMON PROPERTY
(E)	DENOTES ELECTRICAL ROOM BEING COMMON PROPERTY
(M)	DENOTES MECHANICAL ROOM BEING COMMON PROPERTY
(V)	DENOTES VESTIBULE BEING COMMON PROPERTY
(D)	DENOTES DUCT BEING COMMON PROPERTY
(S)	DENOTES STAIRS BEING COMMON PROPERTY
(EL)	DENOTES ELEVATOR BEING COMMON PROPERTY

SECTION ARROWS POINT IN THE DIRECTION OF VIEW

BUTLER SUNDVICK

JESSE MORIN, BCLS
Date: SEPTEMBER 16, 2022
File: 4772\Strata\Final
Dwg: 4772-FS

PARKING LEVEL P5

0 5 10 20

SCALE 1 : 200 DISTANCES ARE IN METRES

THE INTENDED PLOT SCALE OF THIS PLAN IS
560 mm IN WIDTH BY 432 mm IN HEIGHT (C SIZE)
WHEN PLOTTED AT A SCALE OF 1:200.

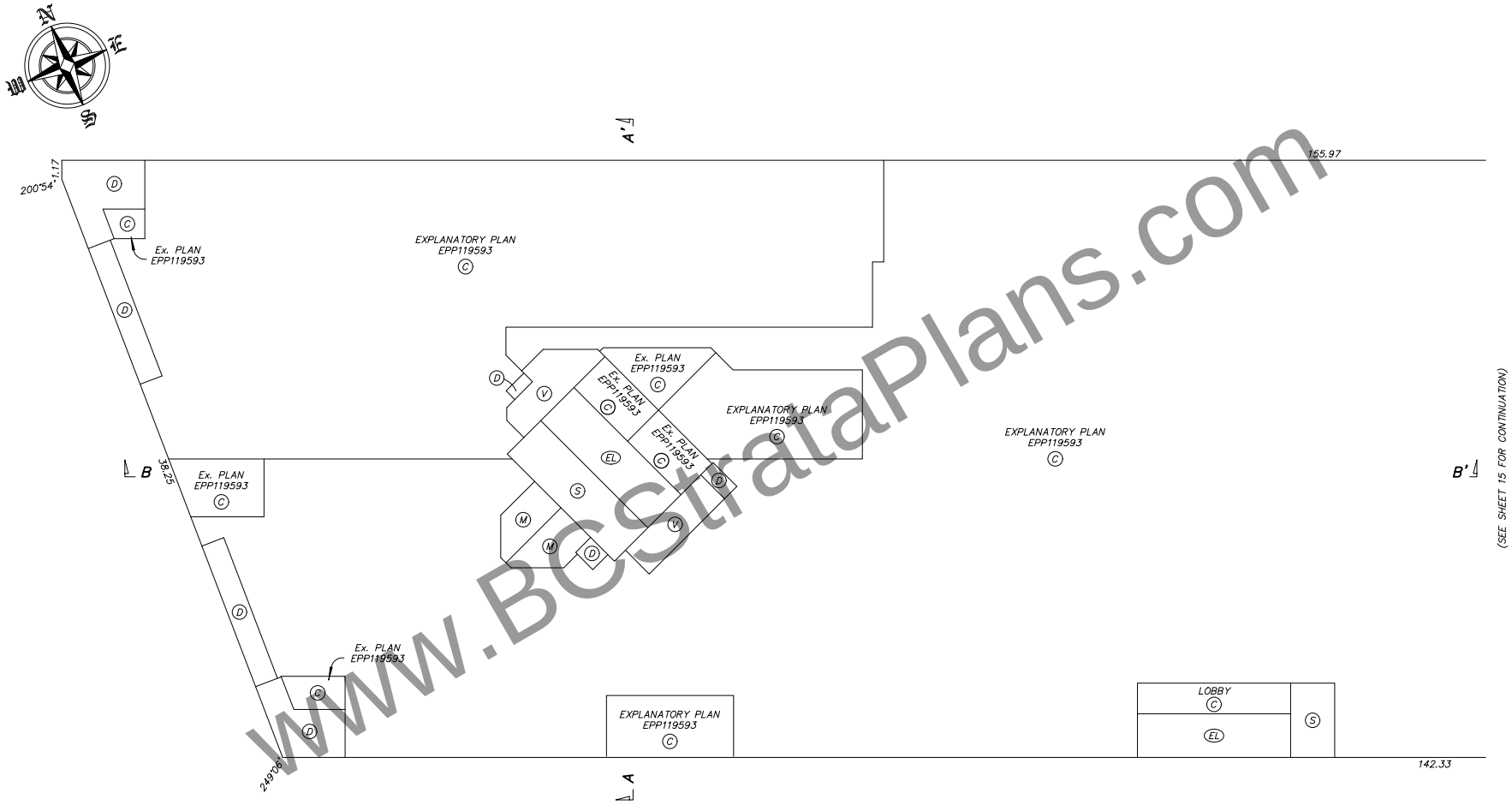

www.BCStrataPlans.com

LEGEND

Ex.	DENOTES EXPLANATORY PLAN
m²	DENOTES SQUARE METRES
SL	DENOTES STRATA LOT
IF	DENOTES INSIDE FACE
(C)	DENOTES COMMON PROPERTY
(E)	DENOTES ELECTRICAL ROOM BEING COMMON PROPERTY
(M)	DENOTES MECHANICAL ROOM BEING COMMON PROPERTY
(V)	DENOTES VESTIBULE BEING COMMON PROPERTY
(D)	DENOTES DUCT BEING COMMON PROPERTY
(S)	DENOTES STAIRS BEING COMMON PROPERTY
(EL)	DENOTES ELEVATOR BEING COMMON PROPERTY

SECTION ARROWS POINT IN THE DIRECTION OF VIEW

BUTLER SUNDVICK

JESSE MORIN, BCLS
Date: SEPTEMBER 16, 2022
File: 4772\Strata\Final
Dwg: 4772-FS

STRATA PLAN EPS8443

PARKING LEVEL P5

0 5 10 20

SCALE 1 : 200 DISTANCES ARE IN METRES

THE INTENDED PLOT SCALE OF THIS PLAN IS
560 mm IN WIDTH BY 432 mm IN HEIGHT (C SIZE)
WHEN PLOTTED AT A SCALE OF 1:200.

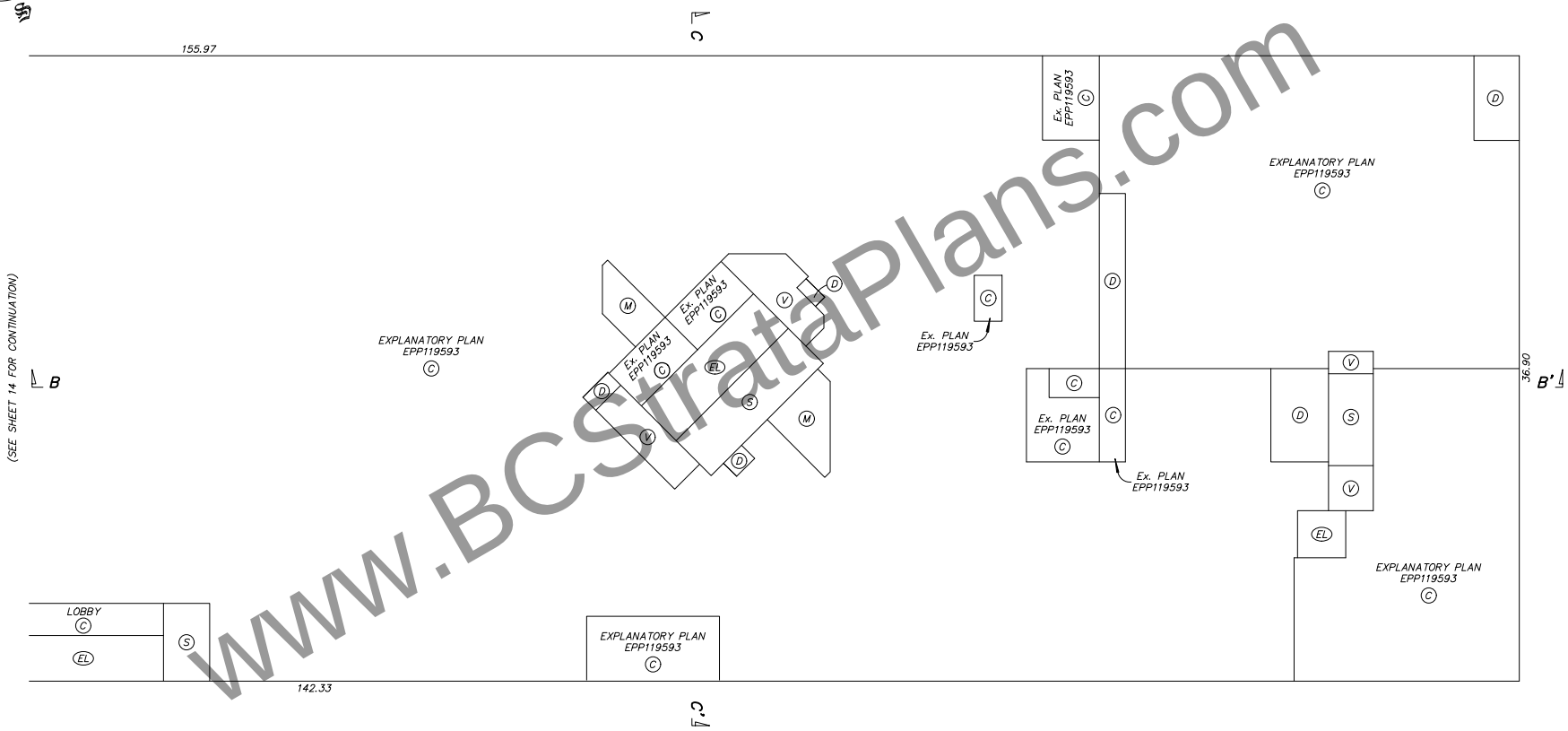

www.BCStrataPlans.com

LEGEND

Ex.	DENOTES EXPLANATORY PLAN
m²	DENOTES SQUARE METRES
SL	DENOTES STRATA LOT
IF	DENOTES INSIDE FACE
(C)	DENOTES COMMON PROPERTY
(E)	DENOTES ELECTRICAL ROOM BEING COMMON PROPERTY
(M)	DENOTES MECHANICAL ROOM BEING COMMON PROPERTY
(V)	DENOTES VESTIBULE BEING COMMON PROPERTY
(D)	DENOTES DUCT BEING COMMON PROPERTY
(S)	DENOTES STAIRS BEING COMMON PROPERTY
(EL)	DENOTES ELEVATOR BEING COMMON PROPERTY

SECTION ARROWS POINT IN THE DIRECTION OF VIEW

BUTLER SUNDVICK

JESSE MORIN, BCLS
Date: SEPTEMBER 16, 2022
File: 4772\Strata\Final
Dwg: 4772-FS

STRATA PLAN EPS8443

PARKING LEVEL P4

0 5 10 20

SCALE 1 : 200 DISTANCES ARE IN METRES

THE INTENDED PLOT SCALE OF THIS PLAN IS
560 mm IN WIDTH BY 432 mm IN HEIGHT (C SIZE)
WHEN PLOTTED AT A SCALE OF 1:200.

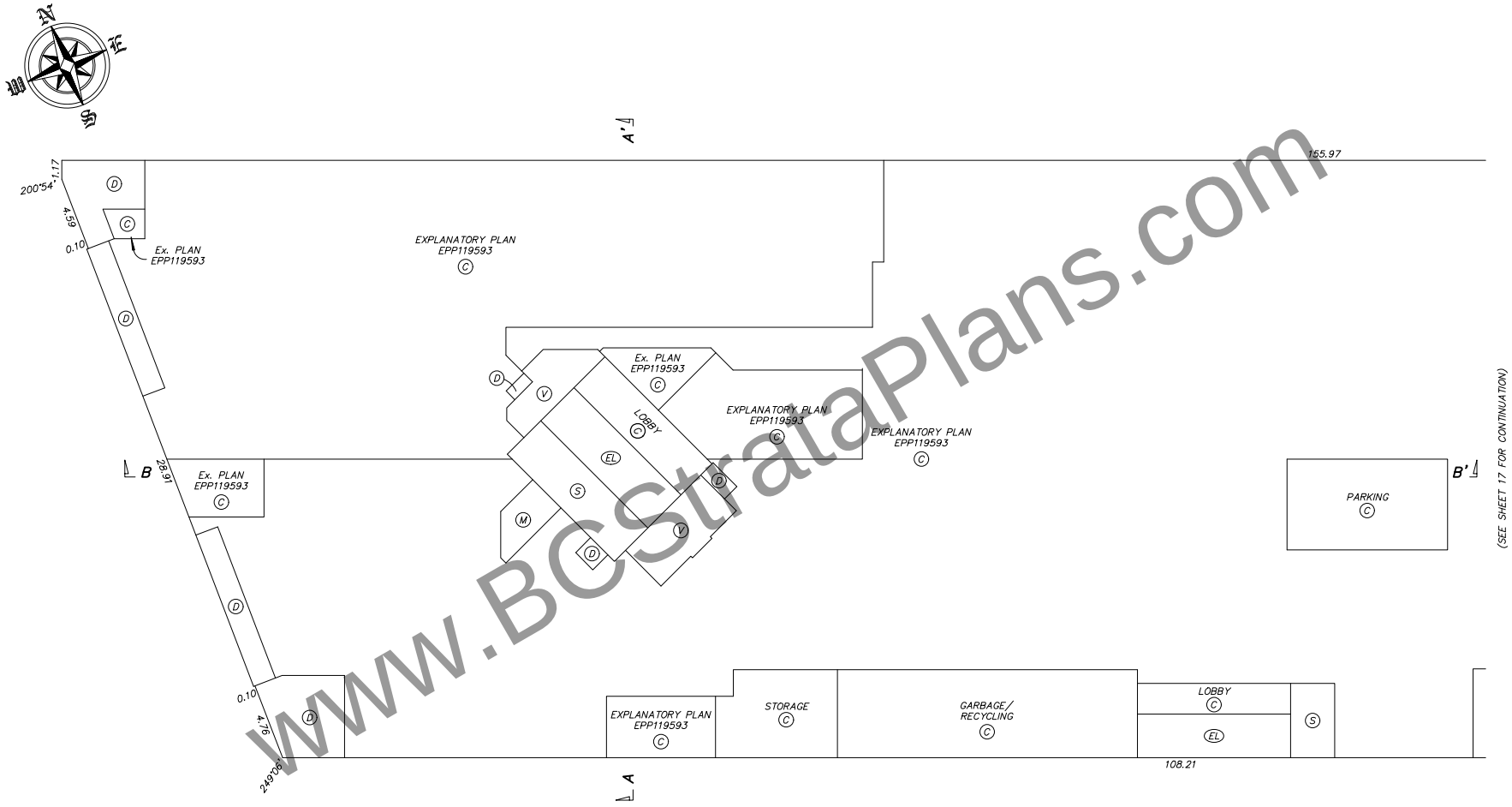

www.BCStrataPlans.com

LEGEND

Ex.	DENOTES EXPLANATORY PLAN
m²	DENOTES SQUARE METRES
SL	DENOTES STRATA LOT
IF	DENOTES INSIDE FACE
(C)	DENOTES COMMON PROPERTY
(E)	DENOTES ELECTRICAL ROOM BEING COMMON PROPERTY
(M)	DENOTES MECHANICAL ROOM BEING COMMON PROPERTY
(V)	DENOTES VESTIBULE BEING COMMON PROPERTY
(D)	DENOTES DUCT BEING COMMON PROPERTY
(S)	DENOTES STAIRS BEING COMMON PROPERTY
(EL)	DENOTES ELEVATOR BEING COMMON PROPERTY

SECTION ARROWS POINT IN THE DIRECTION OF VIEW

BUTLER SUNDVICK

JESSE MORIN, BCLS
Date: SEPTEMBER 16, 2022
File: 4772\Strata\Final
Dwg: 4772-FS

STRATA PLAN EPS8443

PARKING LEVEL P4

0 5 10 20

SCALE 1 : 200 DISTANCES ARE IN METRES

THE INTENDED PLOT SCALE OF THIS PLAN IS
560 mm IN WIDTH BY 432 mm IN HEIGHT (C SIZE)
WHEN PLOTTED AT A SCALE OF 1:200.

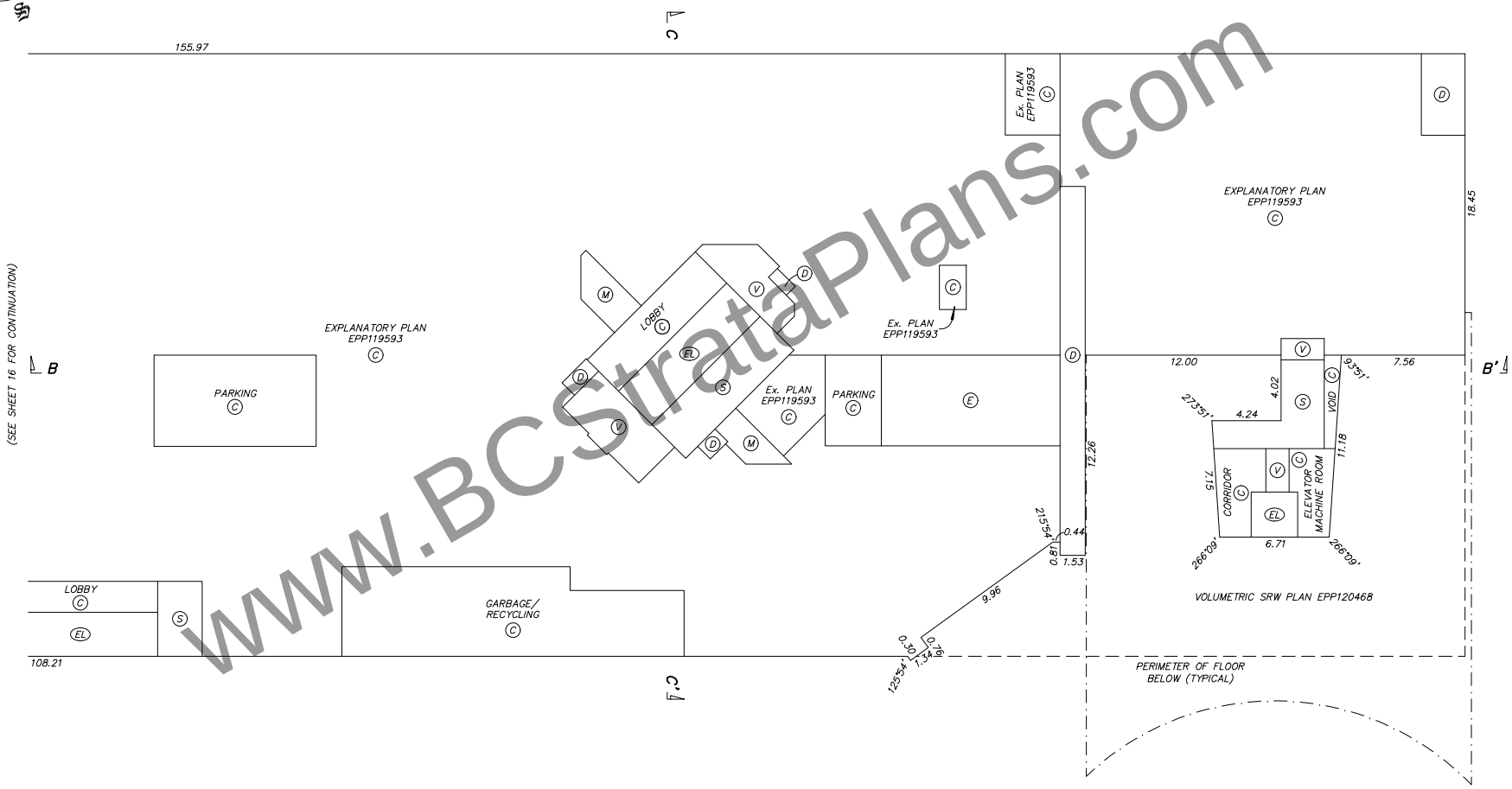

www.BCStrataPlans.com

LEGEND

Ex.	DENOTES EXPLANATORY PLAN
m²	DENOTES SQUARE METRES
SL	DENOTES STRATA LOT
IF	DENOTES INSIDE FACE
(C)	DENOTES COMMON PROPERTY
(E)	DENOTES ELECTRICAL ROOM BEING COMMON PROPERTY
(M)	DENOTES MECHANICAL ROOM BEING COMMON PROPERTY
(V)	DENOTES VESTIBULE BEING COMMON PROPERTY
(D)	DENOTES DUCT BEING COMMON PROPERTY
(S)	DENOTES STAIRS BEING COMMON PROPERTY
(EL)	DENOTES ELEVATOR BEING COMMON PROPERTY

SECTION ARROWS POINT IN THE DIRECTION OF VIEW

BUTLER SUNDVICK

JESSE MORIN, BCLS
Date: SEPTEMBER 16, 2022
File: 4772\Strata\Final
Dwg: 4772-FS

STRATA PLAN EPS8443

PARKING LEVEL P3

0 5 10 20

SCALE 1 : 200 DISTANCES ARE IN METRES

THE INTENDED PLOT SCALE OF THIS PLAN IS
560 mm IN WIDTH BY 432 mm IN HEIGHT (C SIZE)
WHEN PLOTTED AT A SCALE OF 1:200.

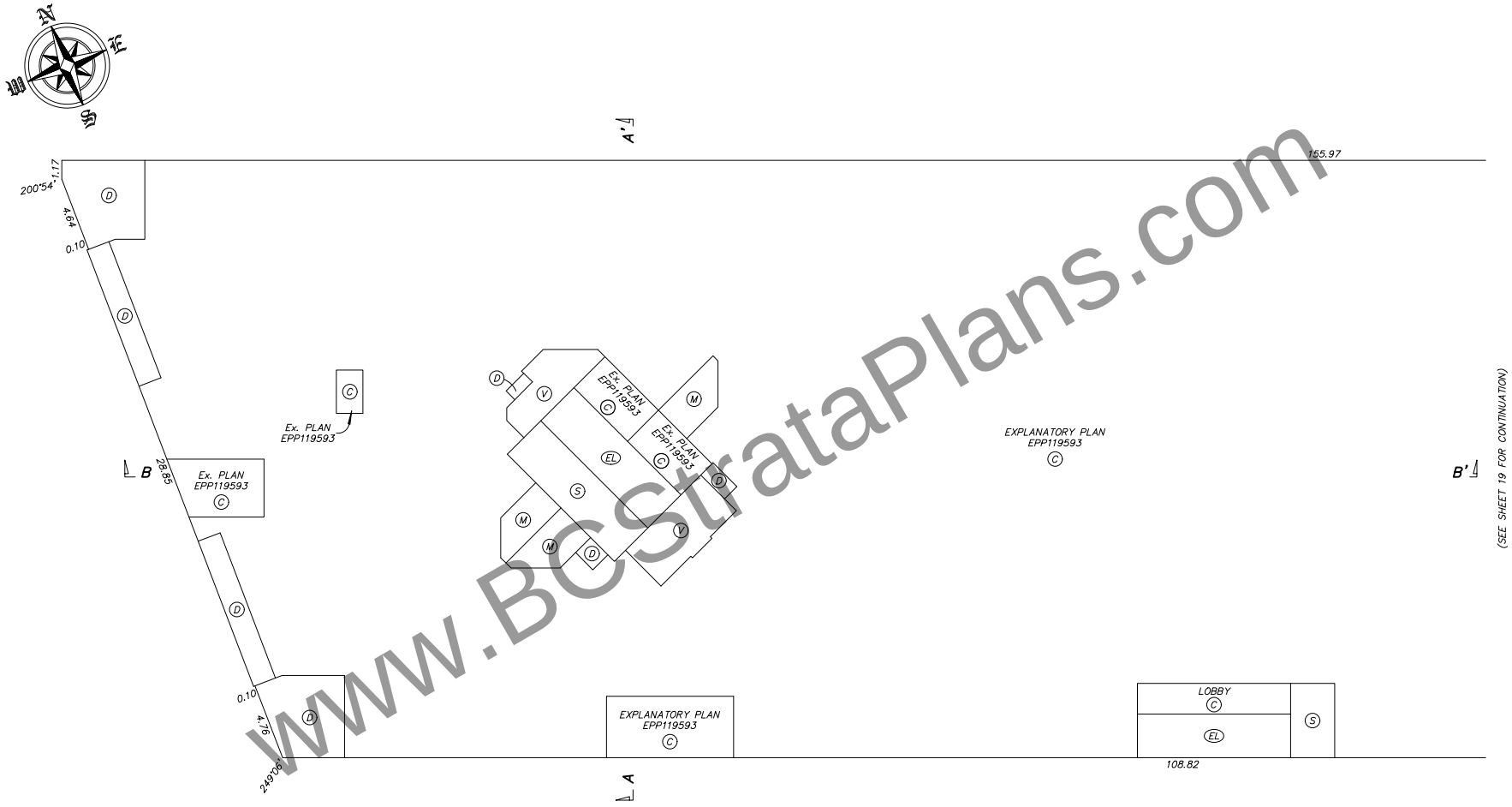

www.BCStrataPlans.com

LEGEND

Ex.	DENOTES EXPLANATORY PLAN
m²	DENOTES SQUARE METRES
SL	DENOTES STRATA LOT
IF	DENOTES INSIDE FACE
(C)	DENOTES COMMON PROPERTY
(E)	DENOTES ELECTRICAL ROOM BEING COMMON PROPERTY
(M)	DENOTES MECHANICAL ROOM BEING COMMON PROPERTY
(V)	DENOTES VESTIBULE BEING COMMON PROPERTY
(D)	DENOTES DUCT BEING COMMON PROPERTY
(S)	DENOTES STAIRS BEING COMMON PROPERTY
(EL)	DENOTES ELEVATOR BEING COMMON PROPERTY

SECTION ARROWS POINT IN THE DIRECTION OF VIEW

BUTLER SUNDVICK

JESSE MORIN, BCLS
Date: SEPTEMBER 16, 2022
File: 4772\Strata\Final
Dwg: 4772-FS

STRATA PLAN EPS8443

PARKING LEVEL P3

0 5 10 20

SCALE 1 : 200 DISTANCES ARE IN METRES

THE INTENDED PLOT SCALE OF THIS PLAN IS
560 mm IN WIDTH BY 432 mm IN HEIGHT (C SIZE)
WHEN PLOTTED AT A SCALE OF 1:200.

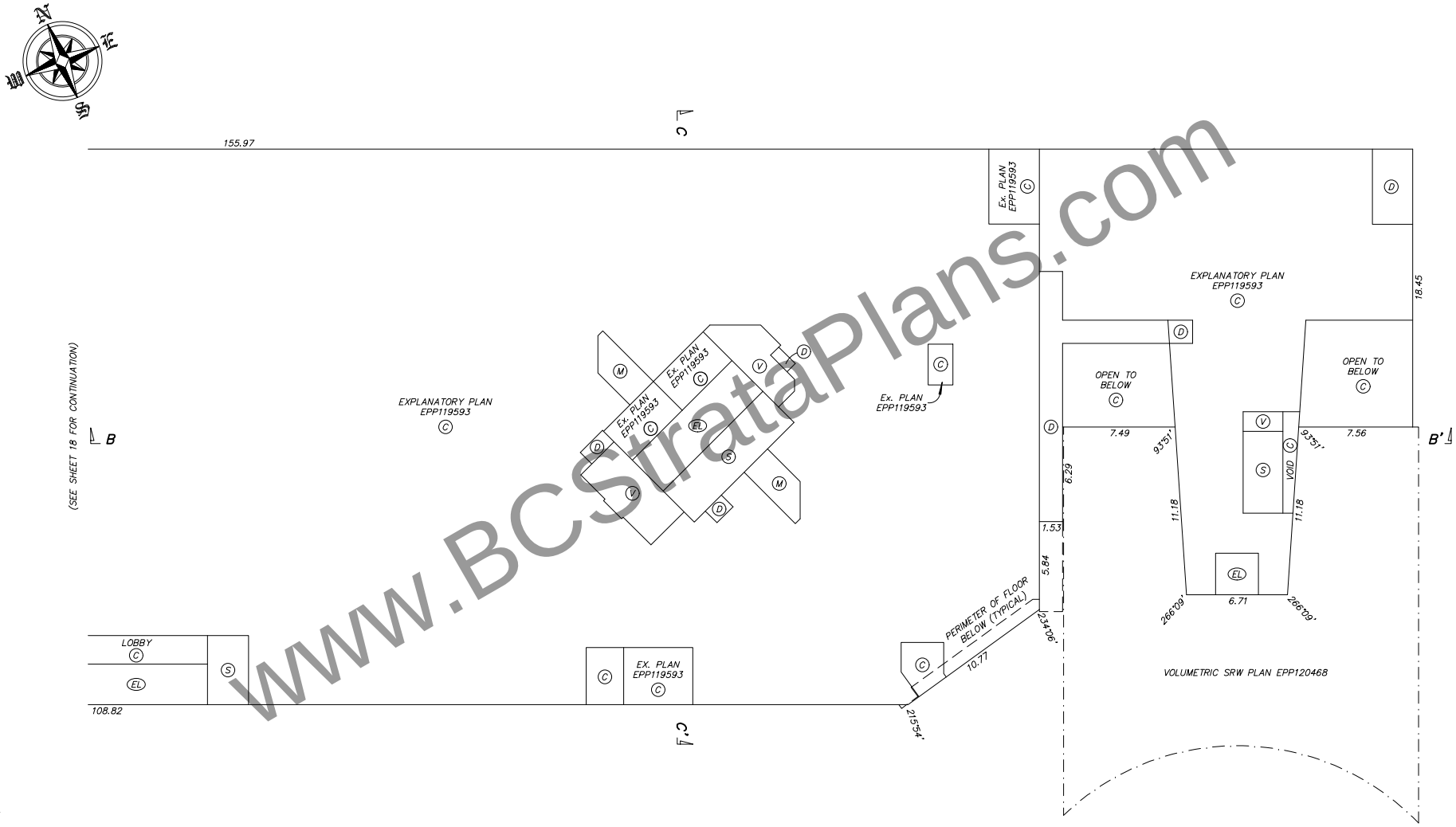

www.BCStrataPlans.com

LEGEND

Ex.	DENOTES EXPLANATORY PLAN
m²	DENOTES SQUARE METRES
SL	DENOTES STRATA LOT
IF	DENOTES INSIDE FACE
(C)	DENOTES COMMON PROPERTY
(E)	DENOTES ELECTRICAL ROOM BEING COMMON PROPERTY
(M)	DENOTES MECHANICAL ROOM BEING COMMON PROPERTY
(V)	DENOTES VESTIBULE BEING COMMON PROPERTY
(D)	DENOTES DUCT BEING COMMON PROPERTY
(S)	DENOTES STAIRS BEING COMMON PROPERTY
(EL)	DENOTES ELEVATOR BEING COMMON PROPERTY

SECTION ARROWS POINT IN THE DIRECTION OF VIEW

BUTLER SUNDVICK

JESSE MORIN, BCLS
Date: SEPTEMBER 16, 2022
File: 4772\Strata\Final
Dwg: 4772-FS

PARKING LEVEL P2

0 5 10 20

SCALE 1 : 200 DISTANCES ARE IN METRES

THE INTENDED PLOT SCALE OF THIS PLAN IS
560 mm IN WIDTH BY 432 mm IN HEIGHT (C SIZE)
WHEN PLOTTED AT A SCALE OF 1:200.

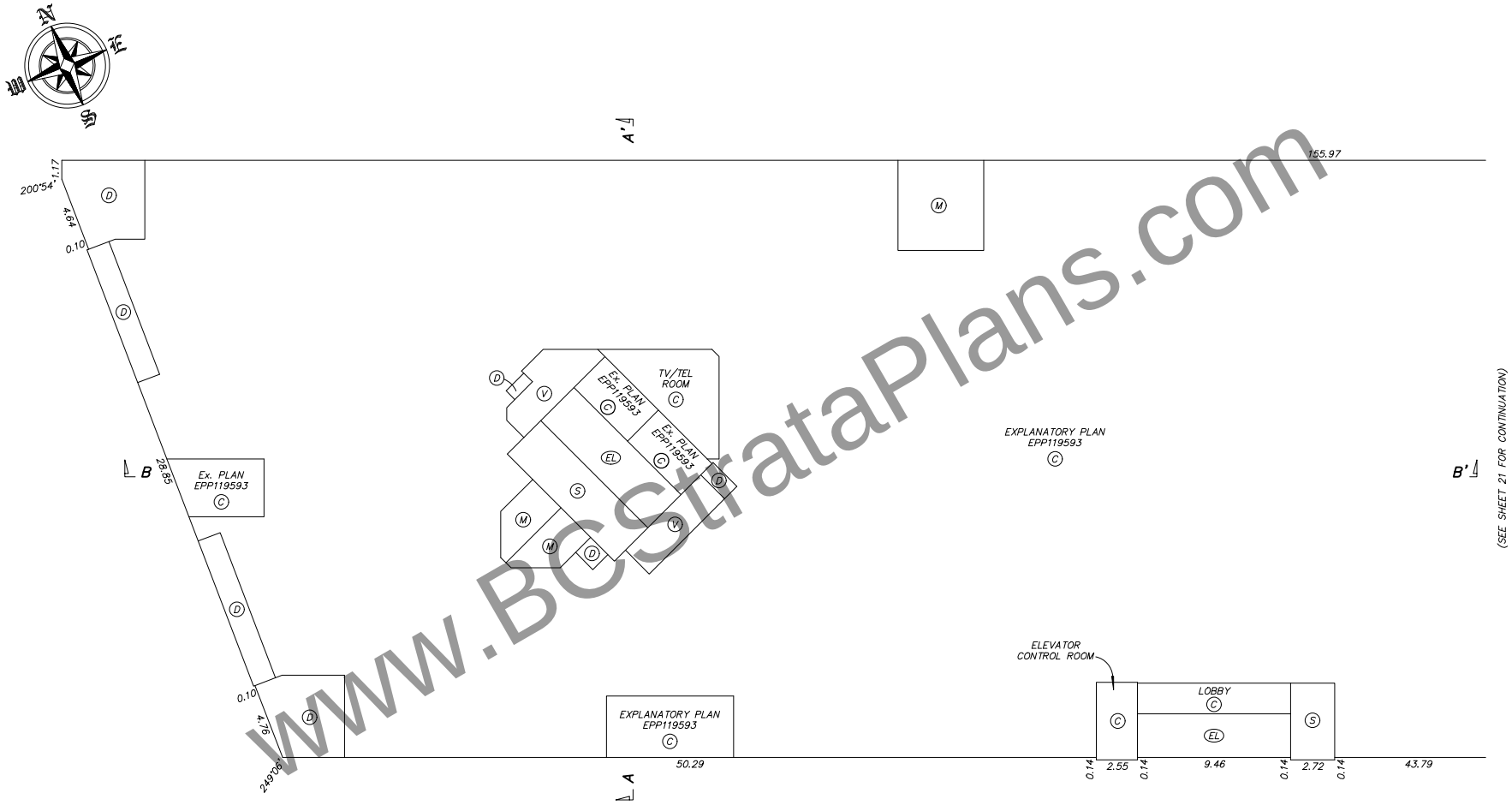

www.BCStrataPlans.com

LEGEND

Ex.	DENOTES EXPLANATORY PLAN
m²	DENOTES SQUARE METRES
SL	DENOTES STRATA LOT
IF	DENOTES INSIDE FACE
(C)	DENOTES COMMON PROPERTY
(E)	DENOTES ELECTRICAL ROOM BEING COMMON PROPERTY
(M)	DENOTES MECHANICAL ROOM BEING COMMON PROPERTY
(V)	DENOTES VESTIBULE BEING COMMON PROPERTY
(D)	DENOTES DUCT BEING COMMON PROPERTY
(S)	DENOTES STAIRS BEING COMMON PROPERTY
(EL)	DENOTES ELEVATOR BEING COMMON PROPERTY

SECTION ARROWS POINT IN THE DIRECTION OF VIEW

BUTLER SUNDVICK

JESSE MORIN, BCLS
Date: SEPTEMBER 16, 2022
File: 4772\Strata\Final
Dwg: 4772-FS

PARKING LEVEL P2

STRATA PLAN EPS8443

0 5 10 20

SCALE 1 : 200 DISTANCES ARE IN METRES

THE INTENDED PLOT SCALE OF THIS PLAN IS
560 mm IN WIDTH BY 432 mm IN HEIGHT (C SIZE)
WHEN PLOTTED AT A SCALE OF 1:200.

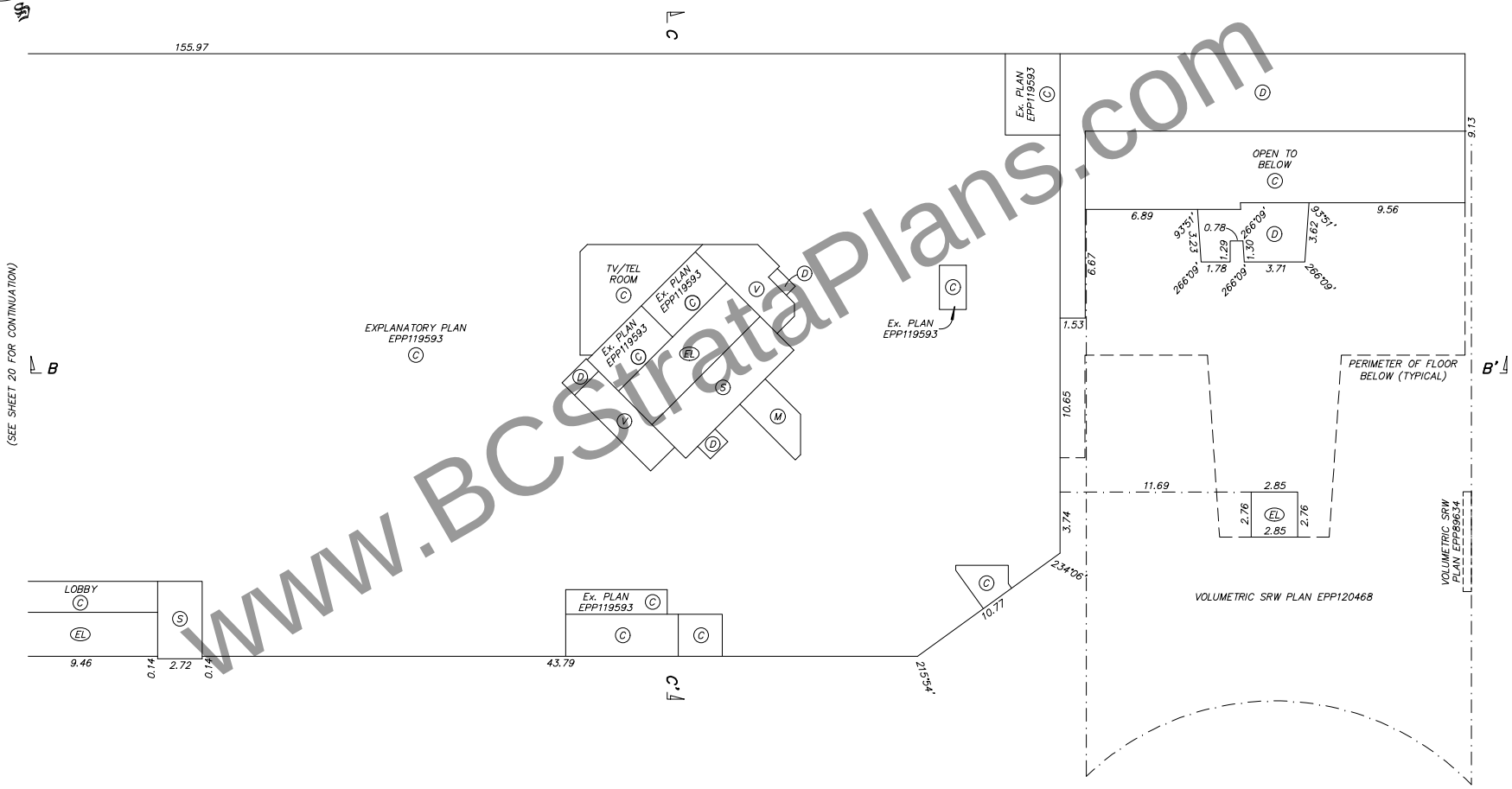

www.BCStrataPlans.com

LEGEND

Ex.	DENOTES EXPLANATORY PLAN
m²	DENOTES SQUARE METRES
SL	DENOTES STRATA LOT
IF	DENOTES INSIDE FACE
(C)	DENOTES COMMON PROPERTY
(E)	DENOTES ELECTRICAL ROOM BEING COMMON PROPERTY
(M)	DENOTES MECHANICAL ROOM BEING COMMON PROPERTY
(V)	DENOTES VESTIBULE BEING COMMON PROPERTY
(D)	DENOTES DUCT BEING COMMON PROPERTY
(S)	DENOTES STAIRS BEING COMMON PROPERTY
(EL)	DENOTES ELEVATOR BEING COMMON PROPERTY

SECTION ARROWS POINT IN THE DIRECTION OF VIEW

BUTLER SUNDVICK

JESSE MORIN, BCLS
Date: SEPTEMBER 16, 2022
File: 4772\Strata\Final
Dwg: 4772-FS

STRATA PLAN EPS8443

PARKING LEVEL P1

0 5 10 20

SCALE 1 : 200 DISTANCES ARE IN METRES

THE INTENDED PLOT SCALE OF THIS PLAN IS
560 mm IN WIDTH BY 432 mm IN HEIGHT (C SIZE)
WHEN PLOTTED AT A SCALE OF 1:200.

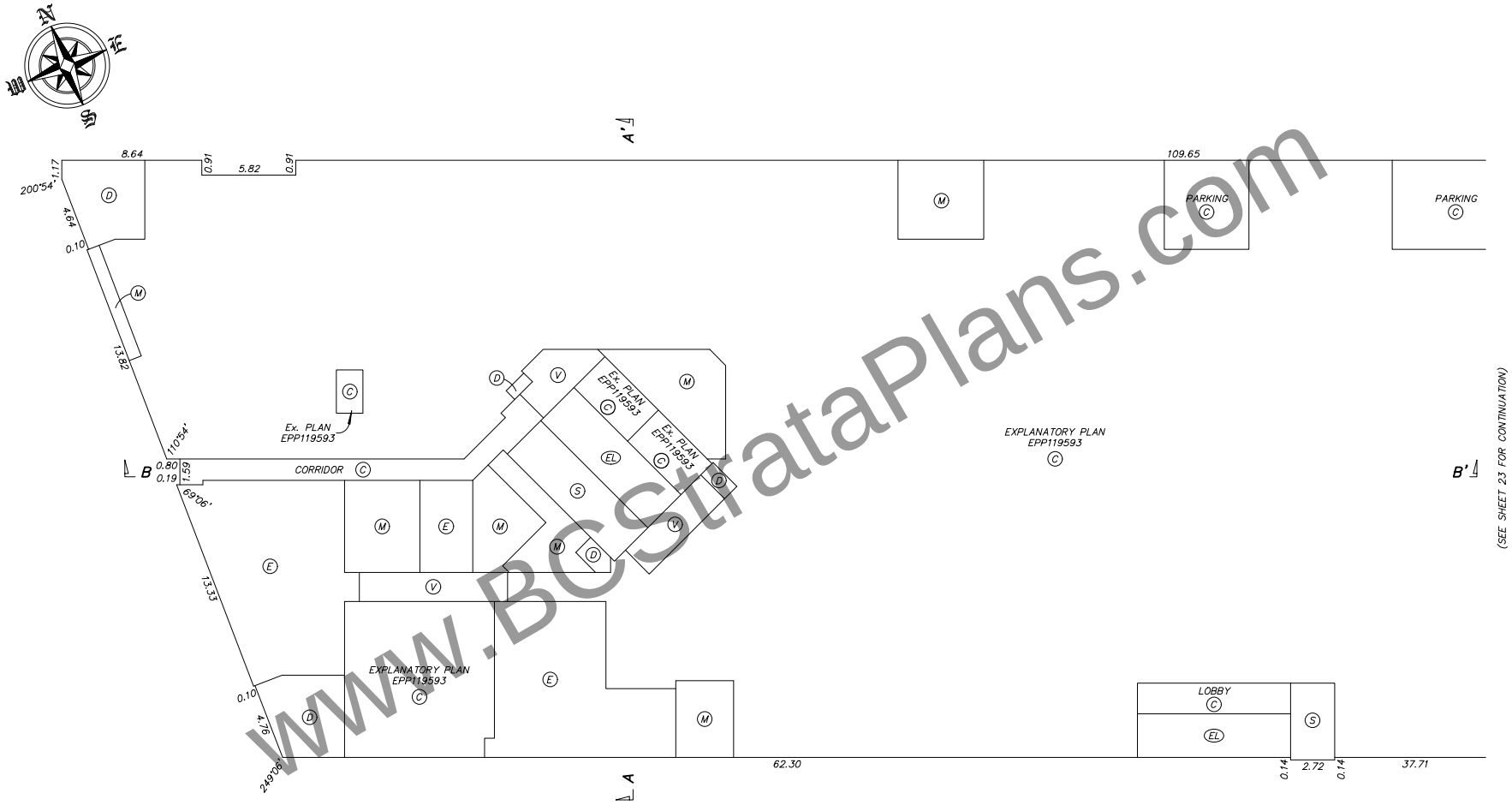

www.BCStrataPlans.com

LEGEND

Ex.	DENOTES EXPLANATORY PLAN
m²	DENOTES SQUARE METRES
SL	DENOTES STRATA LOT
IF	DENOTES INSIDE FACE
(C)	DENOTES COMMON PROPERTY
(E)	DENOTES ELECTRICAL ROOM BEING COMMON PROPERTY
(M)	DENOTES MECHANICAL ROOM BEING COMMON PROPERTY
(V)	DENOTES VESTIBULE BEING COMMON PROPERTY
(D)	DENOTES DUCT BEING COMMON PROPERTY
(S)	DENOTES STAIRS BEING COMMON PROPERTY
(EL)	DENOTES ELEVATOR BEING COMMON PROPERTY

SECTION ARROWS POINT IN THE DIRECTION OF VIEW

BUTLER SUNDVICK

JESSE MORIN, BCLS
Date: SEPTEMBER 16, 2022
File: 4772\Strata\Final
Dwg: 4772-FS

STRATA PLAN EPS8443

PARKING LEVEL P1

0 5 10 20

SCALE 1 : 200 DISTANCES ARE IN METRES

THE INTENDED PLOT SCALE OF THIS PLAN IS
560 mm IN WIDTH BY 432 mm IN HEIGHT (C SIZE)
WHEN PLOTTED AT A SCALE OF 1:200.

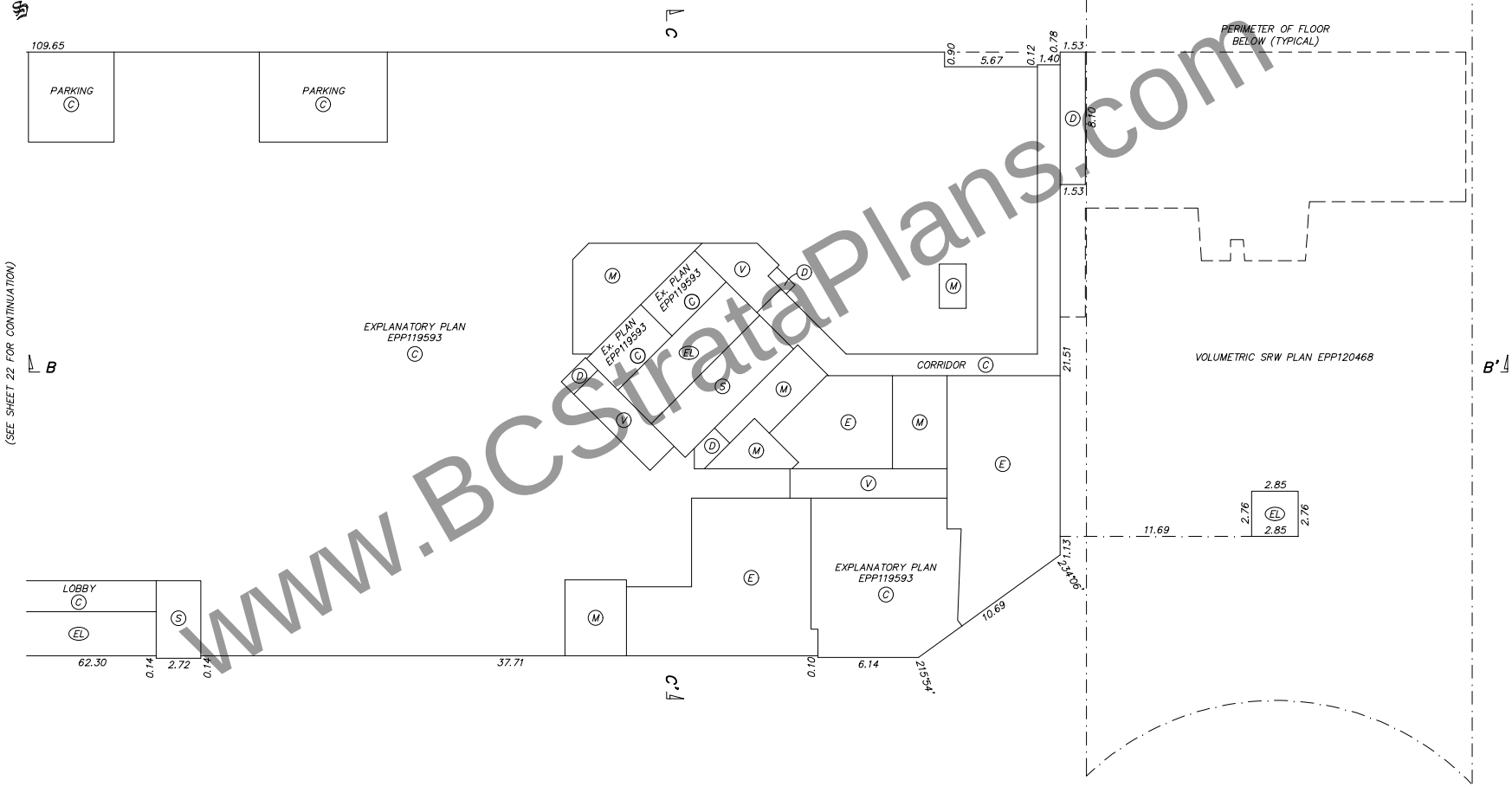

www.BCStrataPlans.com

LEGEND

Ex.	DENOTES EXPLANATORY PLAN
m²	DENOTES SQUARE METRES
SL	DENOTES STRATA LOT
IF	DENOTES INSIDE FACE
(C)	DENOTES COMMON PROPERTY
(E)	DENOTES ELECTRICAL ROOM BEING COMMON PROPERTY
(M)	DENOTES MECHANICAL ROOM BEING COMMON PROPERTY
(V)	DENOTES VESTIBULE BEING COMMON PROPERTY
(D)	DENOTES DUCT BEING COMMON PROPERTY
(S)	DENOTES STAIRS BEING COMMON PROPERTY
(EL)	DENOTES ELEVATOR BEING COMMON PROPERTY

SECTION ARROWS POINT IN THE DIRECTION OF VIEW

BUTLER SUNDVICK

JESSE MORIN, BCLS
Date: SEPTEMBER 16, 2022
File: 4772\Strata\Final
Dwg: 4772-FS

STRATA PLAN EPS8443

LEVEL 1

0 5 10 20

SCALE 1 : 200 DISTANCES ARE IN METRES

THE INTENDED PLOT SCALE OF THIS PLAN IS
560 mm IN WIDTH BY 432 mm IN HEIGHT (C SIZE)
WHEN PLOTTED AT A SCALE OF 1:200.

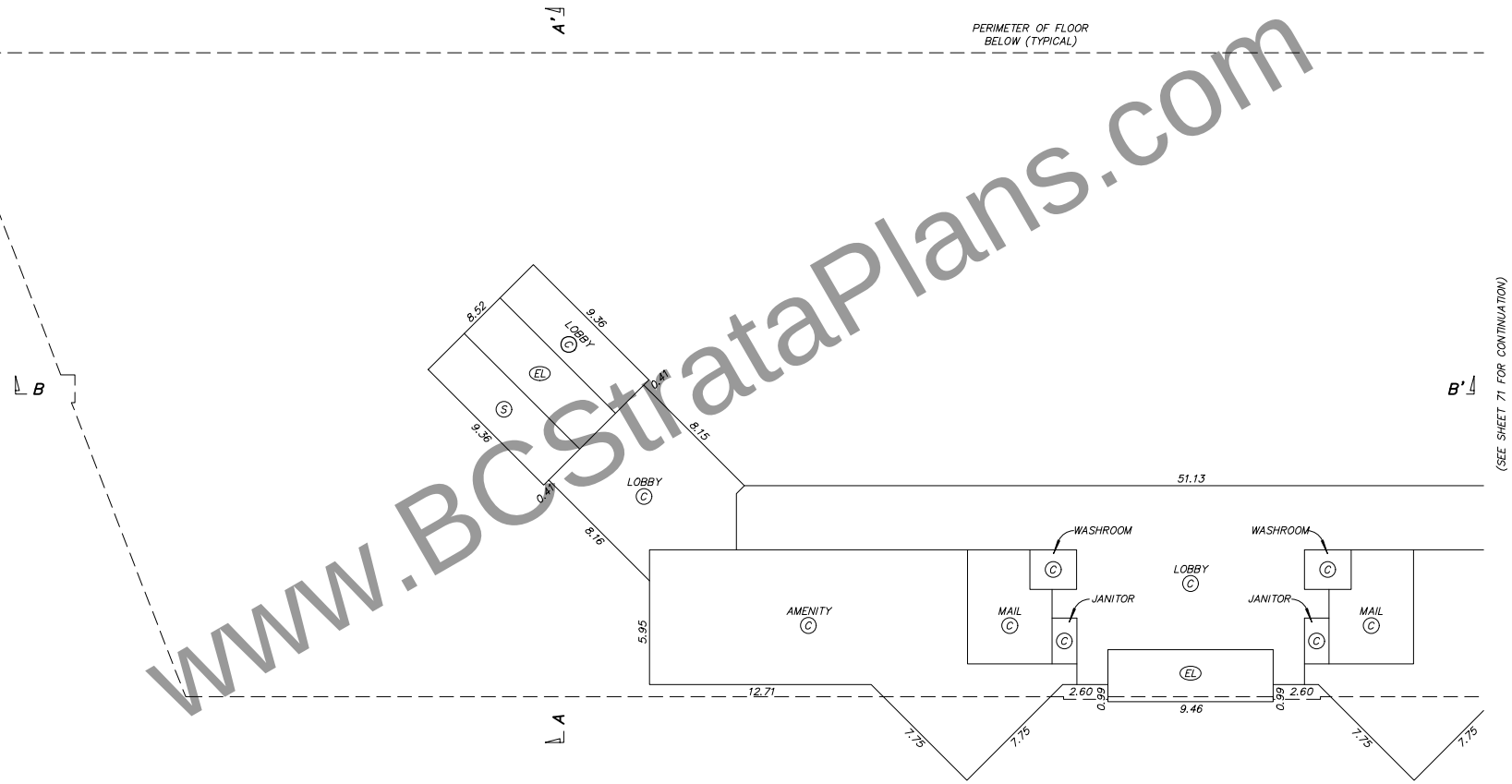

www.BCStrataPlans.com

LEGEND

Ex.	DENOTES EXPLANATORY PLAN
m²	DENOTES SQUARE METRES
SL	DENOTES STRATA LOT
IF	DENOTES INSIDE FACE
(C)	DENOTES COMMON PROPERTY
(E)	DENOTES ELECTRICAL ROOM BEING COMMON PROPERTY
(M)	DENOTES MECHANICAL ROOM BEING COMMON PROPERTY
(V)	DENOTES VESTIBULE BEING COMMON PROPERTY
(D)	DENOTES DUCT BEING COMMON PROPERTY
(S)	DENOTES STAIRS BEING COMMON PROPERTY
(EL)	DENOTES ELEVATOR BEING COMMON PROPERTY

SECTION ARROWS POINT IN THE DIRECTION OF VIEW

BUTLER SUNDVICK

JESSE MORIN, BCLS
Date: SEPTEMBER 16, 2022
File: 4772\Strata\Final
Dwg: 4772-FS

STRATA PLAN EPS8443

LEVEL 2

0 5 10 20

SCALE 1 : 200 DISTANCES ARE IN METRES

THE INTENDED PLOT SCALE OF THIS PLAN IS
560 mm IN WIDTH BY 432 mm IN HEIGHT (C SIZE)
WHEN PLOTTED AT A SCALE OF 1:200.

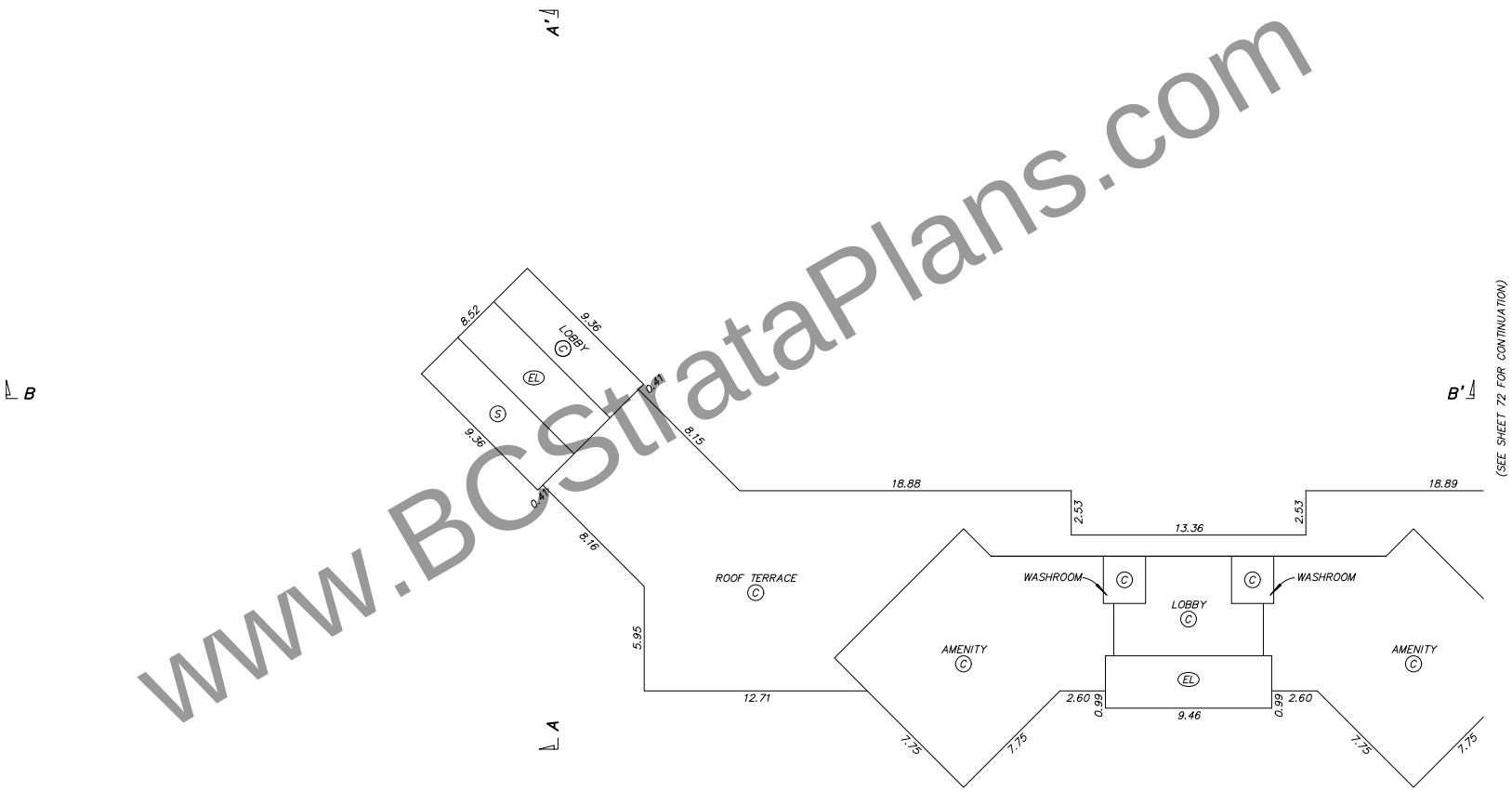

www.BCStrataPlans.com

LEGEND

Ex.	DENOTES EXPLANATORY PLAN
m²	DENOTES SQUARE METRES
SL	DENOTES STRATA LOT
IF	DENOTES INSIDE FACE
(C)	DENOTES COMMON PROPERTY
(E)	DENOTES ELECTRICAL ROOM BEING COMMON PROPERTY
(M)	DENOTES MECHANICAL ROOM BEING COMMON PROPERTY
(V)	DENOTES VESTIBULE BEING COMMON PROPERTY
(D)	DENOTES DUCT BEING COMMON PROPERTY
(S)	DENOTES STAIRS BEING COMMON PROPERTY
(EL)	DENOTES ELEVATOR BEING COMMON PROPERTY

SECTION ARROWS POINT IN THE DIRECTION OF VIEW

BUTLER SUNDVICK

JESSE MORIN, BCLS
Date: SEPTEMBER 16, 2022
File: 4772\Strata\Final
Dwg: 4772-FS

STRATA PLAN EPS8443

AMENITY ROOF LEVEL

0 5 10 20

SCALE 1 : 200 DISTANCES ARE IN METRES

THE INTENDED PLOT SCALE OF THIS PLAN IS
560 mm IN WIDTH BY 432 mm IN HEIGHT (C SIZE)
WHEN PLOTTED AT A SCALE OF 1:200.

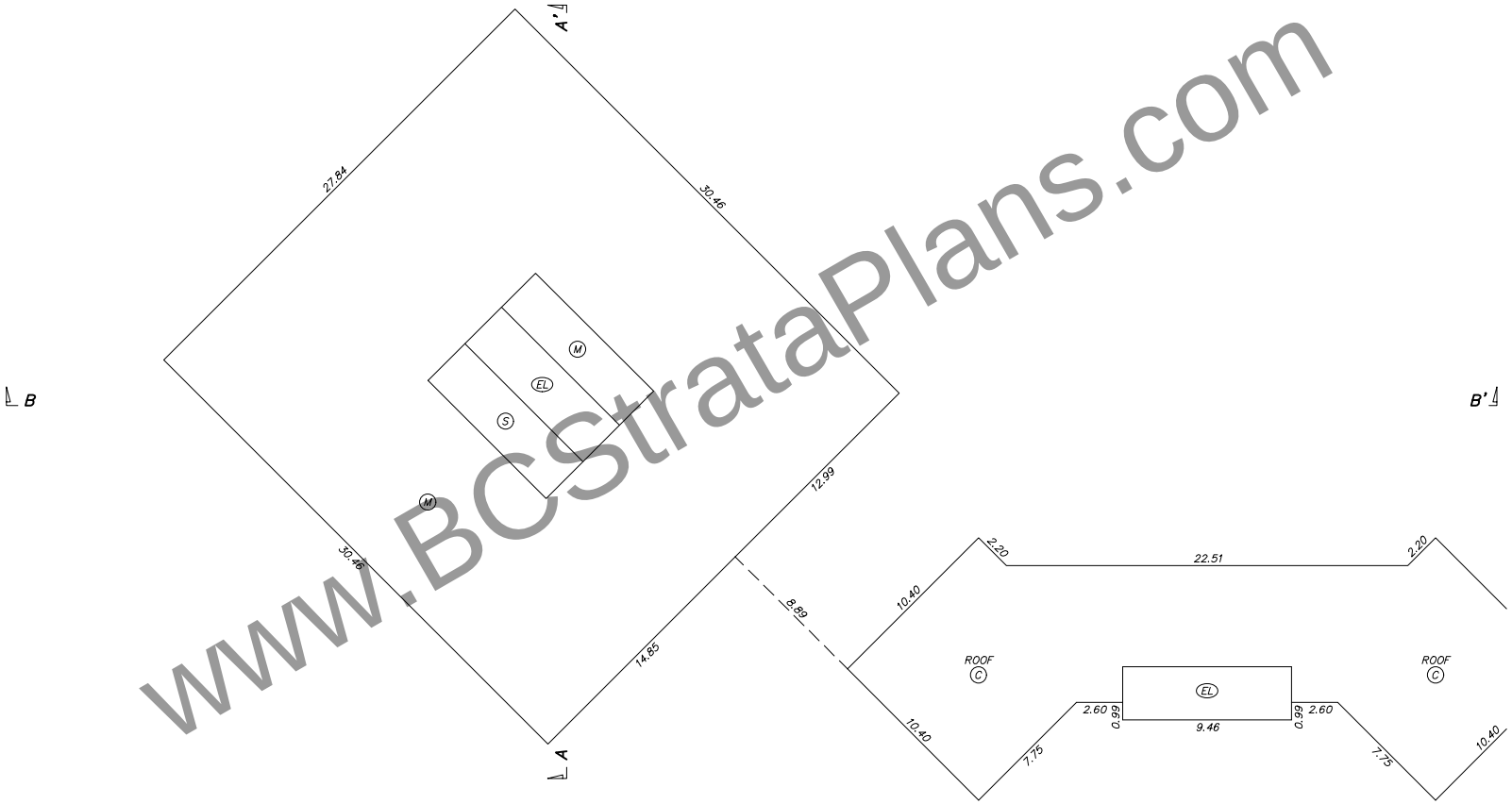

www.BCStrataPlans.com

LEGEND

Ex.	DENOTES EXPLANATORY PLAN
m²	DENOTES SQUARE METRES
SL	DENOTES STRATA LOT
IF	DENOTES INSIDE FACE
(C)	DENOTES COMMON PROPERTY
(E)	DENOTES ELECTRICAL ROOM BEING COMMON PROPERTY
(M)	DENOTES MECHANICAL ROOM BEING COMMON PROPERTY
(V)	DENOTES VESTIBULE BEING COMMON PROPERTY
(D)	DENOTES DUCT BEING COMMON PROPERTY
(S)	DENOTES STAIRS BEING COMMON PROPERTY
(EL)	DENOTES ELEVATOR BEING COMMON PROPERTY

SECTION ARROWS POINT IN THE DIRECTION OF VIEW

BUTLER SUNDVICK

JESSE MORIN, BCLS
Date: SEPTEMBER 16, 2022
File: 4772\Strata\Final
Dwg: 4772-FS

STRATA PLAN EPS8443

TOWER 1
LEVEL 3

0 5 10

SCALE 1 : 100 DISTANCES ARE IN METRES

THE INTENDED PLOT SCALE OF THIS PLAN IS 560 mm IN WIDTH BY 432 mm IN HEIGHT (C SIZE) WHEN PLOTTED AT A SCALE OF 1:100.

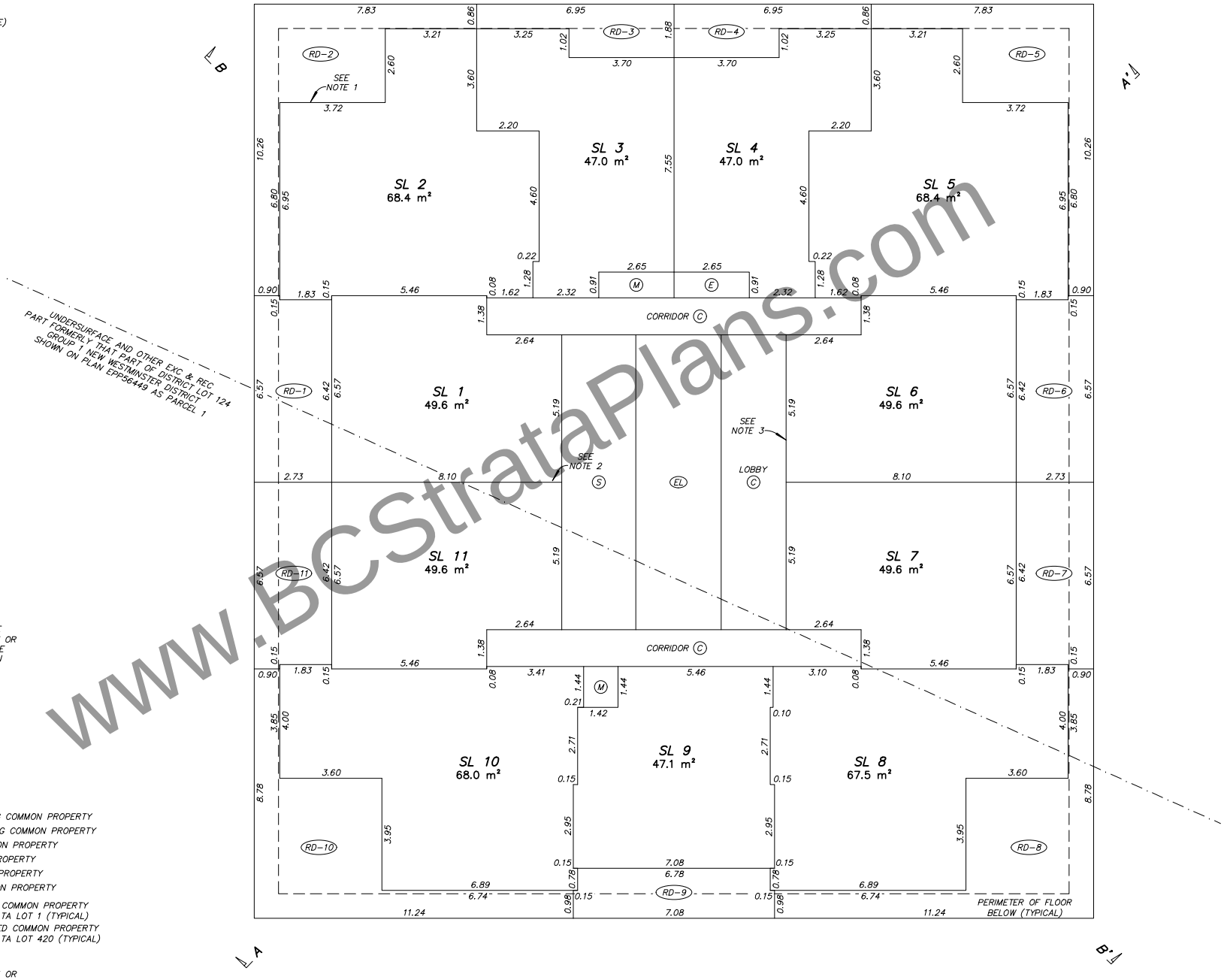

NOTES:

1. STRATA LOT BOUNDARY EXTERIOR FACE OF EXTERIOR WALLS (TYPICAL)
2. STRATA LOT BOUNDARY CENTRELINE OF DEMISING WALLS BETWEEN STRATA LOTS (TYPICAL)
3. STRATA LOT BOUNDARY EXTERIOR FACE OF WALLS ADJACENT TO COMMON AREAS (TYPICAL)
4. STRATA LOT BOUNDARY CENTRELINE FLOOR/CEILING (TYPICAL)
5. UPPER LIMIT OF LCP IS EXTENSION OF THE CENTRELINE OF THE FLOOR/CEILING ABOVE OR WHERE THERE IS NO FLOOR ABOVE, BY THE AVERAGE HEIGHT OF A STRATA LOT WITHIN THE SAME BUILDING (TYPICAL)

LEGEND

m²	DENOTES SQUARE METRES
SL	DENOTES STRATA LOT
PT	DENOTES PART
T	DENOTES TOTAL
Ex.	DENOTES EXPLANATORY
C	DENOTES COMMON PROPERTY
E	DENOTES ELECTRICAL ROOM BEING COMMON PROPERTY
M	DENOTES MECHANICAL ROOM BEING COMMON PROPERTY
V	DENOTES VESTIBULE BEING COMMON PROPERTY
D	DENOTES DUCT BEING COMMON PROPERTY
S	DENOTES STAIRS BEING COMMON PROPERTY
EL	DENOTES ELEVATOR BEING COMMON PROPERTY
B-1	DENOTES BALCONY BEING LIMITED COMMON PROPERTY FOR THE EXCLUSIVE USE OF STRATA LOT 1 (TYPICAL)
RD-420	DENOTES ROOF DECK BEING LIMITED COMMON PROPERTY FOR THE EXCLUSIVE USE OF STRATA LOT 420 (TYPICAL)

LCP AREAS ARE DEFINED AS TO HEIGHT BY THE CENTRE OF THE FLOOR ABOVE OR ITS EXTENSION OR WHERE THERE IS NO FLOOR ABOVE, BY THE AVERAGE HEIGHT OF A STRATA LOT WITHIN THE SAME BUILDING, UNLESS OTHERWISE NOTED

SECTION ARROWS POINT IN THE DIRECTION OF VIEW

www.BCStrataPlans.com

BUTLER SUNDVICK

JESSE MORIN, BCLS
Date: SEPTEMBER 16, 2022
File: 4772\Strata\Final
Dwg: 4772-FS

STRATA PLAN EPS8443

TOWER 1
LEVEL 4

0 5 10

SCALE 1 : 100 DISTANCES ARE IN METRES

THE INTENDED PLOT SCALE OF THIS PLAN IS 560 mm IN WIDTH BY 432 mm IN HEIGHT (C SIZE) WHEN PLOTTED AT A SCALE OF 1:100.

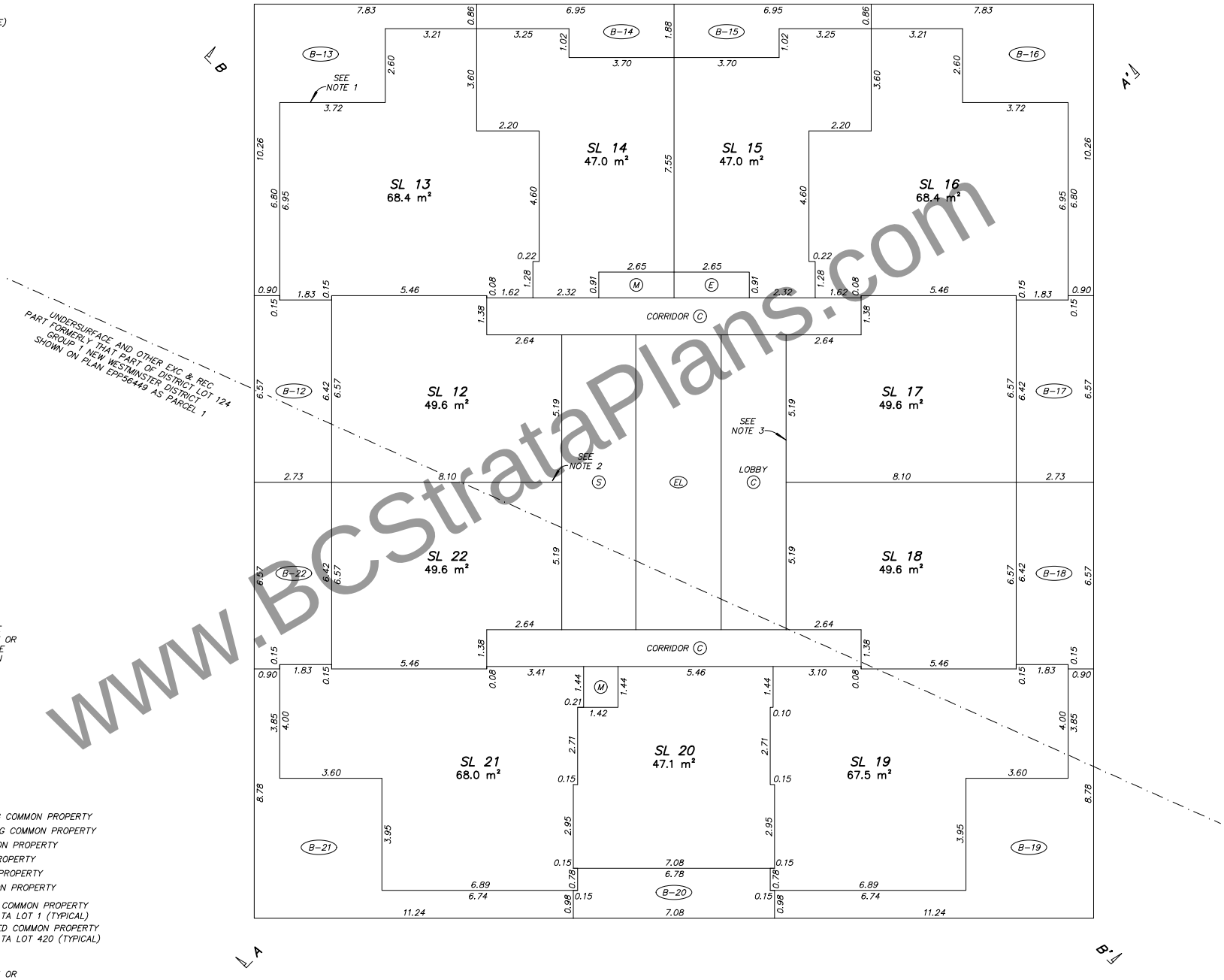

NOTES:

1. STRATA LOT BOUNDARY EXTERIOR FACE OF EXTERIOR WALLS (TYPICAL)
2. STRATA LOT BOUNDARY CENTRELINE OF DEMISING WALLS BETWEEN STRATA LOTS (TYPICAL)
3. STRATA LOT BOUNDARY EXTERIOR FACE OF WALLS ADJACENT TO COMMON AREAS (TYPICAL)
4. STRATA LOT BOUNDARY CENTRELINE FLOOR/CEILING (TYPICAL)
5. UPPER LIMIT OF LCP IS EXTENSION OF THE CENTRELINE OF THE FLOOR/CEILING ABOVE OR WHERE THERE IS NO FLOOR ABOVE, BY THE AVERAGE HEIGHT OF A STRATA LOT WITHIN THE SAME BUILDING (TYPICAL)

LEGEND

m²	DENOTES SQUARE METRES
SL	DENOTES STRATA LOT
PT	DENOTES PART
T	DENOTES TOTAL
Ex.	DENOTES EXPLANATORY
C	DENOTES COMMON PROPERTY
E	DENOTES ELECTRICAL ROOM BEING COMMON PROPERTY
M	DENOTES MECHANICAL ROOM BEING COMMON PROPERTY
V	DENOTES VESTIBULE BEING COMMON PROPERTY
D	DENOTES DUCT BEING COMMON PROPERTY
S	DENOTES STAIRS BEING COMMON PROPERTY
EL	DENOTES ELEVATOR BEING COMMON PROPERTY
B-1	DENOTES BALCONY BEING LIMITED COMMON PROPERTY FOR THE EXCLUSIVE USE OF STRATA LOT 1 (TYPICAL)
RD-420	DENOTES ROOF DECK BEING LIMITED COMMON PROPERTY FOR THE EXCLUSIVE USE OF STRATA LOT 420 (TYPICAL)

LCP AREAS ARE DEFINED AS TO HEIGHT BY THE CENTRE OF THE FLOOR ABOVE OR ITS EXTENSION OR WHERE THERE IS NO FLOOR ABOVE, BY THE AVERAGE HEIGHT OF A STRATA LOT WITHIN THE SAME BUILDING, UNLESS OTHERWISE NOTED

SECTION ARROWS POINT IN THE DIRECTION OF VIEW

www.BCStrataPlans.com

BUTLER SUNDVICK

JESSE MORIN, BCLS
Date: SEPTEMBER 16, 2022
File: 4772\Strata\Final
Dwg: 4772-FS

STRATA PLAN EPS8443

TOWER 1
LEVEL 5

0 5 10

SCALE 1 : 100 DISTANCES ARE IN METRES

THE INTENDED PLOT SCALE OF THIS PLAN IS 560 mm IN WIDTH BY 432 mm IN HEIGHT (C SIZE) WHEN PLOTTED AT A SCALE OF 1:100.

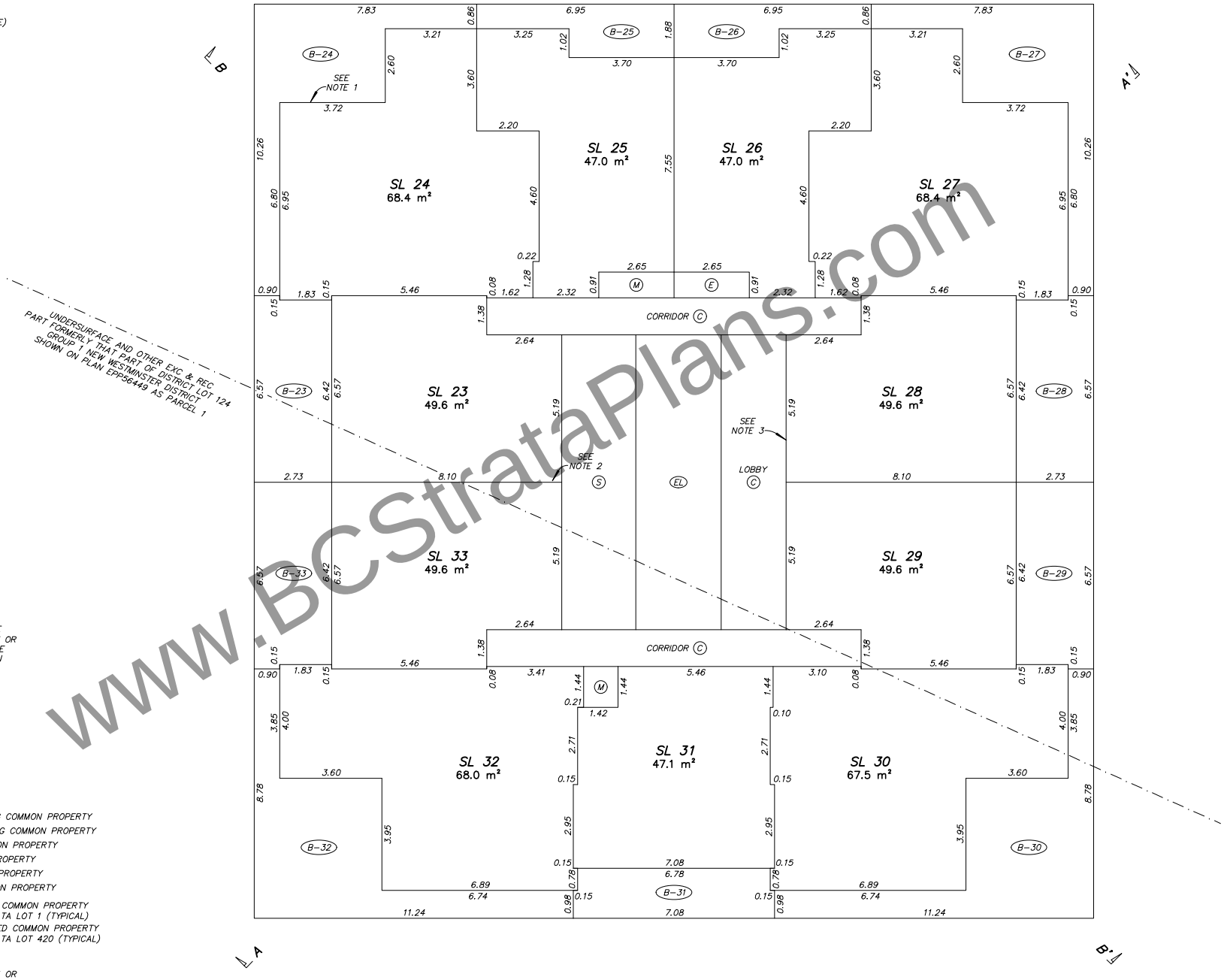

NOTES:

1. STRATA LOT BOUNDARY EXTERIOR FACE OF EXTERIOR WALLS (TYPICAL)
2. STRATA LOT BOUNDARY CENTRELINE OF DEMISING WALLS BETWEEN STRATA LOTS (TYPICAL)
3. STRATA LOT BOUNDARY EXTERIOR FACE OF WALLS ADJACENT TO COMMON AREAS (TYPICAL)
4. STRATA LOT BOUNDARY CENTRELINE FLOOR/CEILING (TYPICAL)
5. UPPER LIMIT OF LCP IS EXTENSION OF THE CENTRELINE OF THE FLOOR/CEILING ABOVE OR WHERE THERE IS NO FLOOR ABOVE, BY THE AVERAGE HEIGHT OF A STRATA LOT WITHIN THE SAME BUILDING (TYPICAL)

LEGEND

m²	DENOTES SQUARE METRES
SL	DENOTES STRATA LOT
PT	DENOTES PART
T	DENOTES TOTAL
Ex.	DENOTES EXPLANATORY
(C)	DENOTES COMMON PROPERTY
(E)	DENOTES ELECTRICAL ROOM BEING COMMON PROPERTY
(M)	DENOTES MECHANICAL ROOM BEING COMMON PROPERTY
(V)	DENOTES VESTIBULE BEING COMMON PROPERTY
(D)	DENOTES DUCT BEING COMMON PROPERTY
(S)	DENOTES STAIRS BEING COMMON PROPERTY
(EL)	DENOTES ELEVATOR BEING COMMON PROPERTY
(B-1)	DENOTES BALCONY BEING LIMITED COMMON PROPERTY FOR THE EXCLUSIVE USE OF STRATA LOT 1 (TYPICAL)
(RD-420)	DENOTES ROOF DECK BEING LIMITED COMMON PROPERTY FOR THE EXCLUSIVE USE OF STRATA LOT 420 (TYPICAL)

LCP AREAS ARE DEFINED AS TO HEIGHT BY THE CENTRE OF THE FLOOR ABOVE OR ITS EXTENSION OR WHERE THERE IS NO FLOOR ABOVE, BY THE AVERAGE HEIGHT OF A STRATA LOT WITHIN THE SAME BUILDING, UNLESS OTHERWISE NOTED

SECTION ARROWS POINT IN THE DIRECTION OF VIEW

BUTLER SUNDVICK

JESSE MORIN, BCLS
Date: SEPTEMBER 16, 2022
File: 4772\Strata\Final
Dwg: 4772-FS

www.BCStrataPlans.com

STRATA PLAN EPS8443

TOWER 1
LEVEL 6

0 5 10

SCALE 1 : 100 DISTANCES ARE IN METRES

THE INTENDED PLOT SCALE OF THIS PLAN IS 560 mm IN WIDTH BY 432 mm IN HEIGHT (C SIZE) WHEN PLOTTED AT A SCALE OF 1:100.

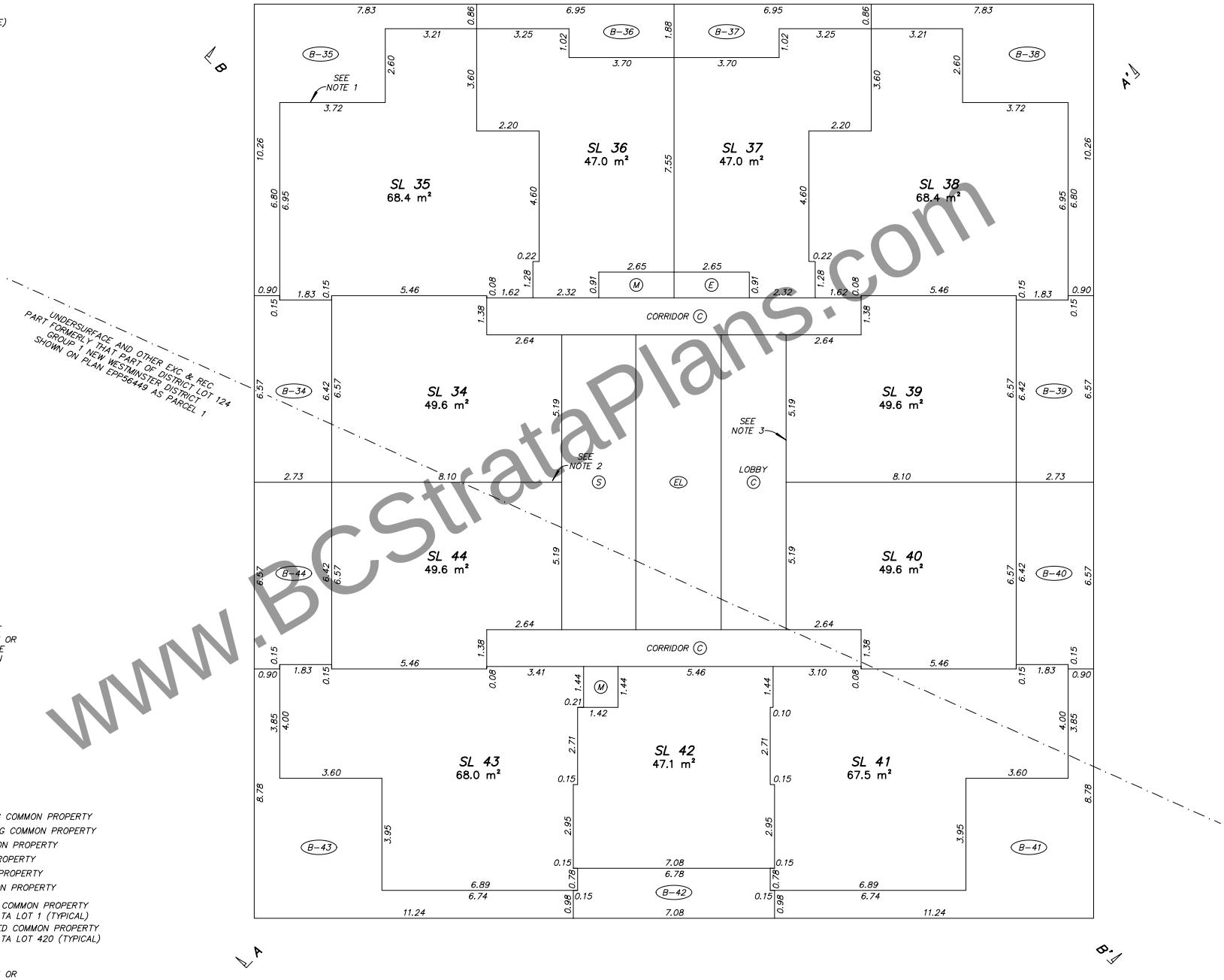

NOTES:

1. STRATA LOT BOUNDARY EXTERIOR FACE OF EXTERIOR WALLS (TYPICAL)
2. STRATA LOT BOUNDARY CENTRELINE OF DEMISING WALLS BETWEEN STRATA LOTS (TYPICAL)
3. STRATA LOT BOUNDARY EXTERIOR FACE OF WALLS ADJACENT TO COMMON AREAS (TYPICAL)
4. STRATA LOT BOUNDARY CENTRELINE FLOOR/CEILING (TYPICAL)
5. UPPER LIMIT OF LCP IS EXTENSION OF THE CENTRELINE OF THE FLOOR/CEILING ABOVE OR WHERE THERE IS NO FLOOR ABOVE, BY THE AVERAGE HEIGHT OF A STRATA LOT WITHIN THE SAME BUILDING (TYPICAL)

LEGEND

m²	DENOTES SQUARE METRES
SL	DENOTES STRATA LOT
PT	DENOTES PART
T	DENOTES TOTAL
Ex.	DENOTES EXPLANATORY
(C)	DENOTES COMMON PROPERTY
(E)	DENOTES ELECTRICAL ROOM BEING COMMON PROPERTY
(M)	DENOTES MECHANICAL ROOM BEING COMMON PROPERTY
(V)	DENOTES VESTIBULE BEING COMMON PROPERTY
(D)	DENOTES DUCT BEING COMMON PROPERTY
(S)	DENOTES STAIRS BEING COMMON PROPERTY
(EL)	DENOTES ELEVATOR BEING COMMON PROPERTY
(B-1)	DENOTES BALCONY BEING LIMITED COMMON PROPERTY FOR THE EXCLUSIVE USE OF STRATA LOT 1 (TYPICAL)
(RD-420)	DENOTES ROOF DECK BEING LIMITED COMMON PROPERTY FOR THE EXCLUSIVE USE OF STRATA LOT 420 (TYPICAL)

LCP AREAS ARE DEFINED AS TO HEIGHT BY THE CENTRE OF THE FLOOR ABOVE OR ITS EXTENSION OR WHERE THERE IS NO FLOOR ABOVE, BY THE AVERAGE HEIGHT OF A STRATA LOT WITHIN THE SAME BUILDING, UNLESS OTHERWISE NOTED

SECTION ARROWS POINT IN THE DIRECTION OF VIEW

www.BCStrataPlans.com

BUTLER SUNDVICK

JESSE MORIN, BCLS
Date: SEPTEMBER 16, 2022
File: 4772\Strata\Final
Dwg: 4772-FS

STRATA PLAN EPS8443

TOWER 1
LEVEL 7

0 5 10

SCALE 1 : 100 DISTANCES ARE IN METRES

THE INTENDED PLOT SCALE OF THIS PLAN IS 560 mm IN WIDTH BY 432 mm IN HEIGHT (C SIZE) WHEN PLOTTED AT A SCALE OF 1:100.

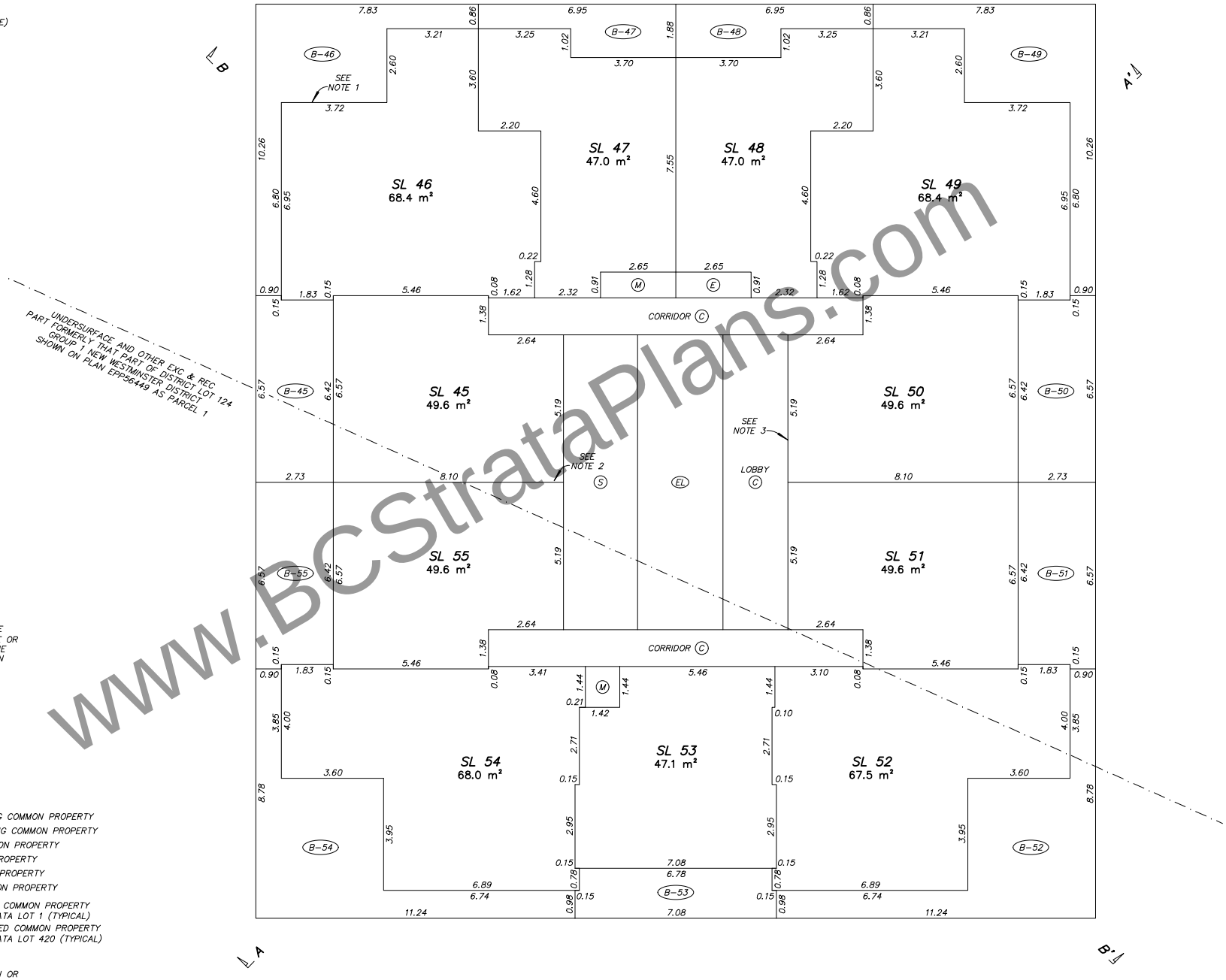

NOTES:

1. STRATA LOT BOUNDARY EXTERIOR FACE OF EXTERIOR WALLS (TYPICAL)
2. STRATA LOT BOUNDARY CENTRELINE OF DEMISING WALLS BETWEEN STRATA LOTS (TYPICAL)
3. STRATA LOT BOUNDARY EXTERIOR FACE OF WALLS ADJACENT TO COMMON AREAS (TYPICAL)
4. STRATA LOT BOUNDARY CENTRELINE FLOOR/CEILING (TYPICAL)
5. UPPER LIMIT OF LCP IS EXTENSION OF THE CENTRELINE OF THE FLOOR/CEILING ABOVE OR WHERE THERE IS NO FLOOR ABOVE, BY THE AVERAGE HEIGHT OF A STRATA LOT WITHIN THE SAME BUILDING (TYPICAL)

LEGEND

m²	DENOTES SQUARE METRES
SL	DENOTES STRATA LOT
PT	DENOTES PART
T	DENOTES TOTAL
Ex.	DENOTES EXPLANATORY
(C)	DENOTES COMMON PROPERTY
(E)	DENOTES ELECTRICAL ROOM BEING COMMON PROPERTY
(M)	DENOTES MECHANICAL ROOM BEING COMMON PROPERTY
(V)	DENOTES VESTIBULE BEING COMMON PROPERTY
(D)	DENOTES DUCT BEING COMMON PROPERTY
(S)	DENOTES STAIRS BEING COMMON PROPERTY
(EL)	DENOTES ELEVATOR BEING COMMON PROPERTY
(B-1)	DENOTES BALCONY BEING LIMITED COMMON PROPERTY FOR THE EXCLUSIVE USE OF STRATA LOT 1 (TYPICAL)
(RD-420)	DENOTES ROOF DECK BEING LIMITED COMMON PROPERTY FOR THE EXCLUSIVE USE OF STRATA LOT 420 (TYPICAL)

LCP AREAS ARE DEFINED AS TO HEIGHT BY THE CENTRE OF THE FLOOR ABOVE OR ITS EXTENSION OR WHERE THERE IS NO FLOOR ABOVE, BY THE AVERAGE HEIGHT OF A STRATA LOT WITHIN THE SAME BUILDING, UNLESS OTHERWISE NOTED

SECTION ARROWS POINT IN THE DIRECTION OF VIEW

BUTLER SUNDVICK

JESSE MORIN, BCLS
Date: SEPTEMBER 16, 2022
File: 4772\Strata\Final
Dwg: 4772-FS

www.BCStrataPlans.com

STRATA PLAN EPS8443

TOWER 1
LEVEL 8

0 5 10

SCALE 1 : 100 DISTANCES ARE IN METRES

THE INTENDED PLOT SCALE OF THIS PLAN IS 560 mm IN WIDTH BY 432 mm IN HEIGHT (C SIZE) WHEN PLOTTED AT A SCALE OF 1:100.

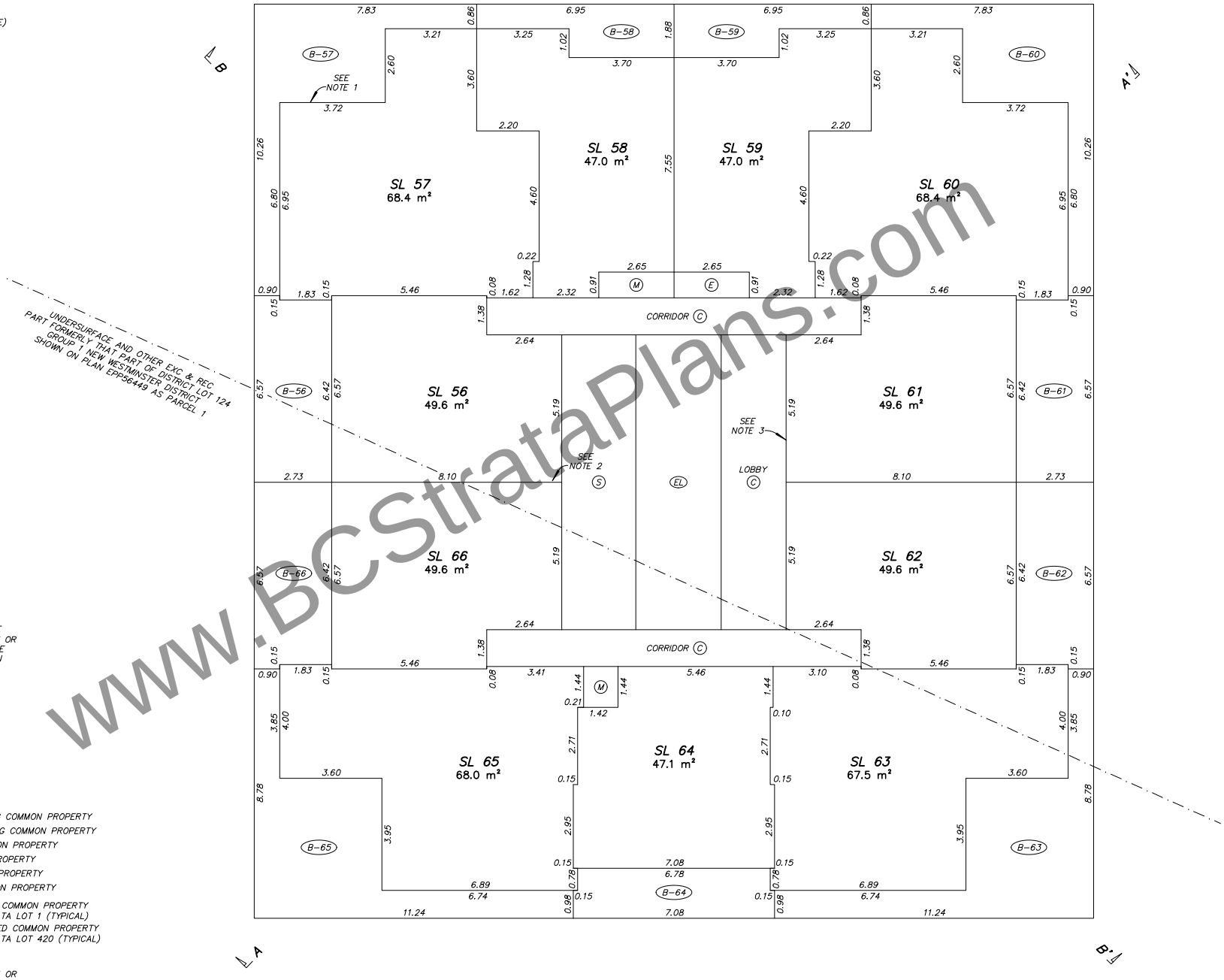

NOTES:

1. STRATA LOT BOUNDARY EXTERIOR FACE OF EXTERIOR WALLS (TYPICAL)
2. STRATA LOT BOUNDARY CENTRELINE OF DEMISING WALLS BETWEEN STRATA LOTS (TYPICAL)
3. STRATA LOT BOUNDARY EXTERIOR FACE OF WALLS ADJACENT TO COMMON AREAS (TYPICAL)
4. STRATA LOT BOUNDARY CENTRELINE FLOOR/CEILING (TYPICAL)
5. UPPER LIMIT OF LCP IS EXTENSION OF THE CENTRELINE OF THE FLOOR/CEILING ABOVE OR WHERE THERE IS NO FLOOR ABOVE, BY THE AVERAGE HEIGHT OF A STRATA LOT WITHIN THE SAME BUILDING (TYPICAL)

LEGEND

m²	DENOTES SQUARE METRES
SL	DENOTES STRATA LOT
PT	DENOTES PART
T	DENOTES TOTAL
Ex.	DENOTES EXPLANATORY
C	DENOTES COMMON PROPERTY
E	DENOTES ELECTRICAL ROOM BEING COMMON PROPERTY
M	DENOTES MECHANICAL ROOM BEING COMMON PROPERTY
V	DENOTES VESTIBULE BEING COMMON PROPERTY
D	DENOTES DUCT BEING COMMON PROPERTY
S	DENOTES STAIRS BEING COMMON PROPERTY
EL	DENOTES ELEVATOR BEING COMMON PROPERTY
B-1	DENOTES BALCONY BEING LIMITED COMMON PROPERTY FOR THE EXCLUSIVE USE OF STRATA LOT 1 (TYPICAL)
RD-420	DENOTES ROOF DECK BEING LIMITED COMMON PROPERTY FOR THE EXCLUSIVE USE OF STRATA LOT 420 (TYPICAL)

LCP AREAS ARE DEFINED AS TO HEIGHT BY THE CENTRE OF THE FLOOR ABOVE OR ITS EXTENSION OR WHERE THERE IS NO FLOOR ABOVE, BY THE AVERAGE HEIGHT OF A STRATA LOT WITHIN THE SAME BUILDING, UNLESS OTHERWISE NOTED

SECTION ARROWS POINT IN THE DIRECTION OF VIEW

www.BCStrataPlans.com

BUTLER SUNDVICK

JESSE MORIN, BCLS
Date: SEPTEMBER 16, 2022
File: 4772\Strata\Final
Dwg: 4772-FS

STRATA PLAN EPS8443

TOWER 1
LEVEL 9

0 5 10

SCALE 1 : 100 DISTANCES ARE IN METRES

THE INTENDED PLOT SCALE OF THIS PLAN IS 560 mm IN WIDTH BY 432 mm IN HEIGHT (C SIZE) WHEN PLOTTED AT A SCALE OF 1:100.

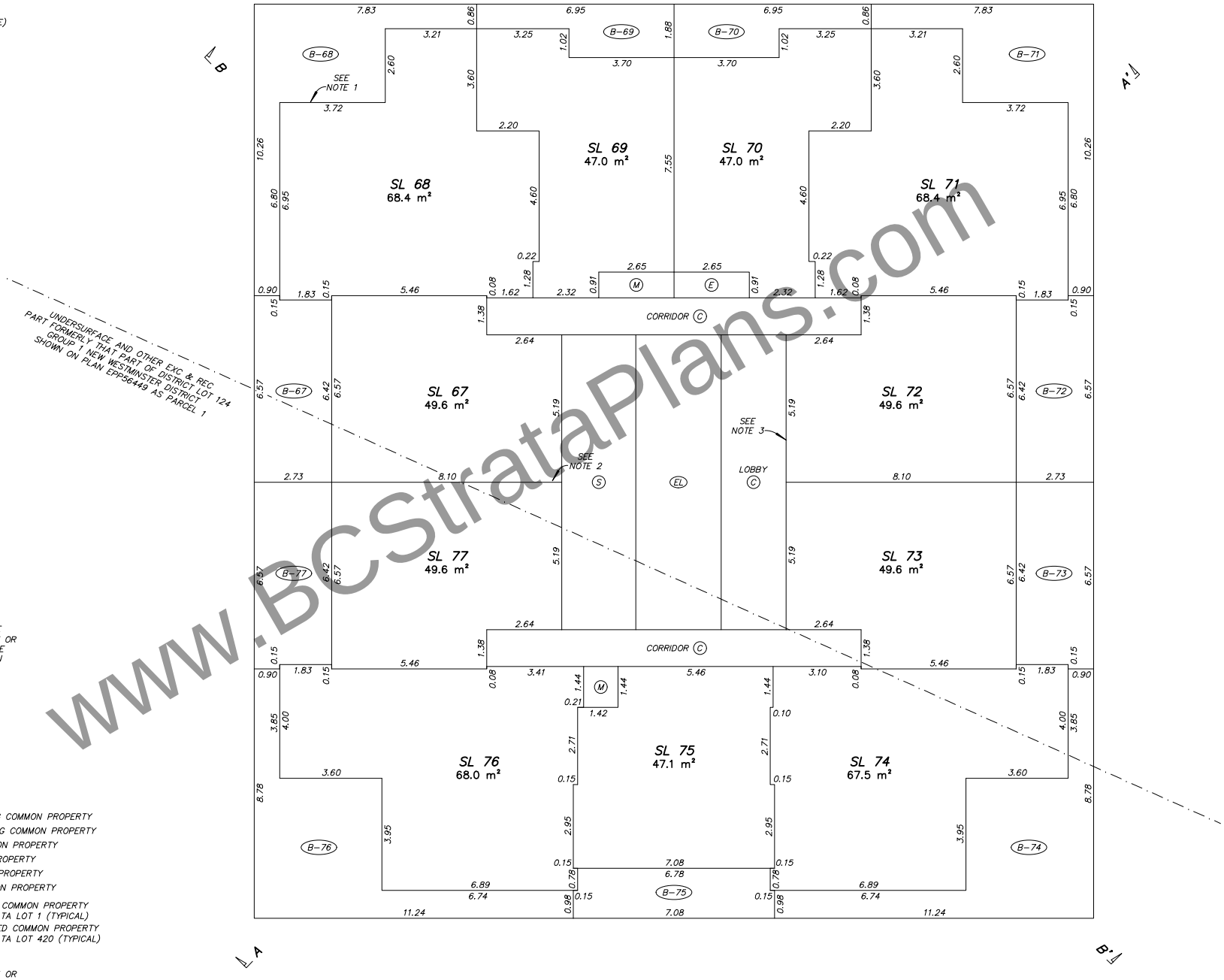

NOTES:

1. STRATA LOT BOUNDARY EXTERIOR FACE OF EXTERIOR WALLS (TYPICAL)
2. STRATA LOT BOUNDARY CENTRELINE OF DEMISING WALLS BETWEEN STRATA LOTS (TYPICAL)
3. STRATA LOT BOUNDARY EXTERIOR FACE OF WALLS ADJACENT TO COMMON AREAS (TYPICAL)
4. STRATA LOT BOUNDARY CENTRELINE FLOOR/CEILING (TYPICAL)
5. UPPER LIMIT OF LCP IS EXTENSION OF THE CENTRELINE OF THE FLOOR/CEILING ABOVE OR WHERE THERE IS NO FLOOR ABOVE, BY THE AVERAGE HEIGHT OF A STRATA LOT WITHIN THE SAME BUILDING (TYPICAL)

LEGEND

m²	DENOTES SQUARE METRES
SL	DENOTES STRATA LOT
PT	DENOTES PART
T	DENOTES TOTAL
Ex.	DENOTES EXPLANATORY
(C)	DENOTES COMMON PROPERTY
(E)	DENOTES ELECTRICAL ROOM BEING COMMON PROPERTY
(M)	DENOTES MECHANICAL ROOM BEING COMMON PROPERTY
(V)	DENOTES VESTIBULE BEING COMMON PROPERTY
(D)	DENOTES DUCT BEING COMMON PROPERTY
(S)	DENOTES STAIRS BEING COMMON PROPERTY
(EL)	DENOTES ELEVATOR BEING COMMON PROPERTY
(B-1)	DENOTES BALCONY BEING LIMITED COMMON PROPERTY FOR THE EXCLUSIVE USE OF STRATA LOT 1 (TYPICAL)
(RD-420)	DENOTES ROOF DECK BEING LIMITED COMMON PROPERTY FOR THE EXCLUSIVE USE OF STRATA LOT 420 (TYPICAL)

LCP AREAS ARE DEFINED AS TO HEIGHT BY THE CENTRE OF THE FLOOR ABOVE OR ITS EXTENSION OR WHERE THERE IS NO FLOOR ABOVE, BY THE AVERAGE HEIGHT OF A STRATA LOT WITHIN THE SAME BUILDING, UNLESS OTHERWISE NOTED

SECTION ARROWS POINT IN THE DIRECTION OF VIEW

www.BCStrataPlans.com

BUTLER SUNDVICK

JESSE MORIN, BCLS
Date: SEPTEMBER 16, 2022
File: 4772\Strata\Final
Dwg: 4772-FS

STRATA PLAN EPS8443

TOWER 1
LEVEL 10

0 5 10

SCALE 1 : 100 DISTANCES ARE IN METRES

THE INTENDED PLOT SCALE OF THIS PLAN IS 560 mm IN WIDTH BY 432 mm IN HEIGHT (C SIZE) WHEN PLOTTED AT A SCALE OF 1:100.

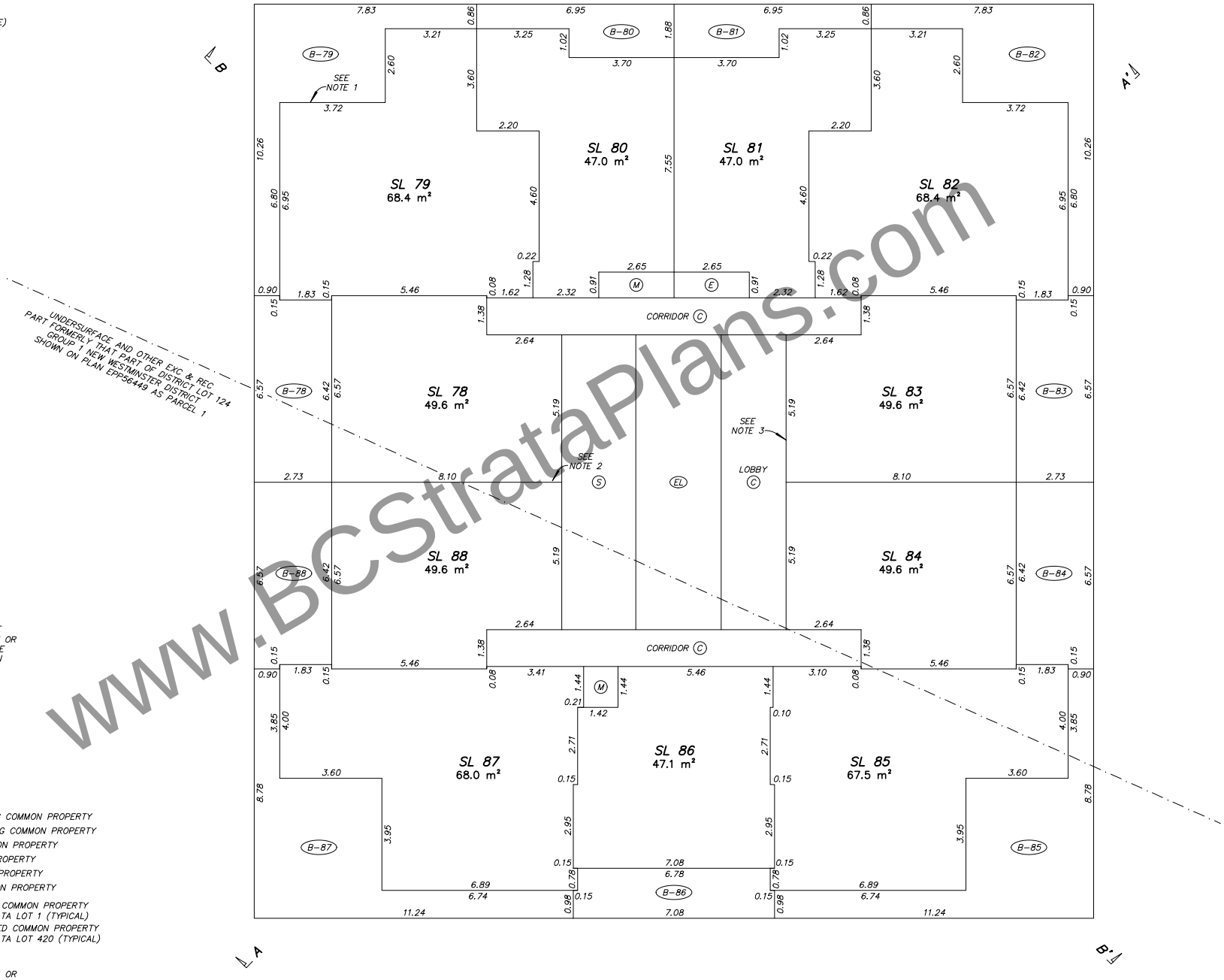

NOTES:

1. STRATA LOT BOUNDARY EXTERIOR FACE OF EXTERIOR WALLS (TYPICAL)
2. STRATA LOT BOUNDARY CENTRELINE OF DEMISING WALLS BETWEEN STRATA LOTS (TYPICAL)
3. STRATA LOT BOUNDARY EXTERIOR FACE OF WALLS ADJACENT TO COMMON AREAS (TYPICAL)
4. STRATA LOT BOUNDARY CENTRELINE FLOOR/CEILING (TYPICAL)
5. UPPER LIMIT OF LCP IS EXTENSION OF THE CENTRELINE OF THE FLOOR/CEILING ABOVE OR WHERE THERE IS NO FLOOR ABOVE, BY THE AVERAGE HEIGHT OF A STRATA LOT WITHIN THE SAME BUILDING (TYPICAL)

LEGEND

m²	DENOTES SQUARE METRES
SL	DENOTES STRATA LOT
PT	DENOTES PART
T	DENOTES TOTAL
Ex.	DENOTES EXPLANATORY
(C)	DENOTES COMMON PROPERTY
(E)	DENOTES ELECTRICAL ROOM BEING COMMON PROPERTY
(M)	DENOTES MECHANICAL ROOM BEING COMMON PROPERTY
(V)	DENOTES VESTIBULE BEING COMMON PROPERTY
(D)	DENOTES DUCT BEING COMMON PROPERTY
(S)	DENOTES STAIRS BEING COMMON PROPERTY
(EL)	DENOTES ELEVATOR BEING COMMON PROPERTY
(B-1)	DENOTES BALCONY BEING LIMITED COMMON PROPERTY FOR THE EXCLUSIVE USE OF STRATA LOT 1 (TYPICAL)
(RD-420)	DENOTES ROOF DECK BEING LIMITED COMMON PROPERTY FOR THE EXCLUSIVE USE OF STRATA LOT 420 (TYPICAL)

LCP AREAS ARE DEFINED AS TO HEIGHT BY THE CENTRE OF THE FLOOR ABOVE OR ITS EXTENSION OR WHERE THERE IS NO FLOOR ABOVE, BY THE AVERAGE HEIGHT OF A STRATA LOT WITHIN THE SAME BUILDING, UNLESS OTHERWISE NOTED

SECTION ARROWS POINT IN THE DIRECTION OF VIEW

BUTLER SUNDVICK

JESSE MORIN, BCLS
Date: SEPTEMBER 16, 2022
File: 4772\Strata\Final
Dwg: 4772-FS

www.BCStrataPlans.com

STRATA PLAN EPS8443

TOWER 1
LEVEL 11

0 5 10

SCALE 1 : 100 DISTANCES ARE IN METRES

THE INTENDED PLOT SCALE OF THIS PLAN IS 560 mm IN WIDTH BY 432 mm IN HEIGHT (C SIZE) WHEN PLOTTED AT A SCALE OF 1:100.

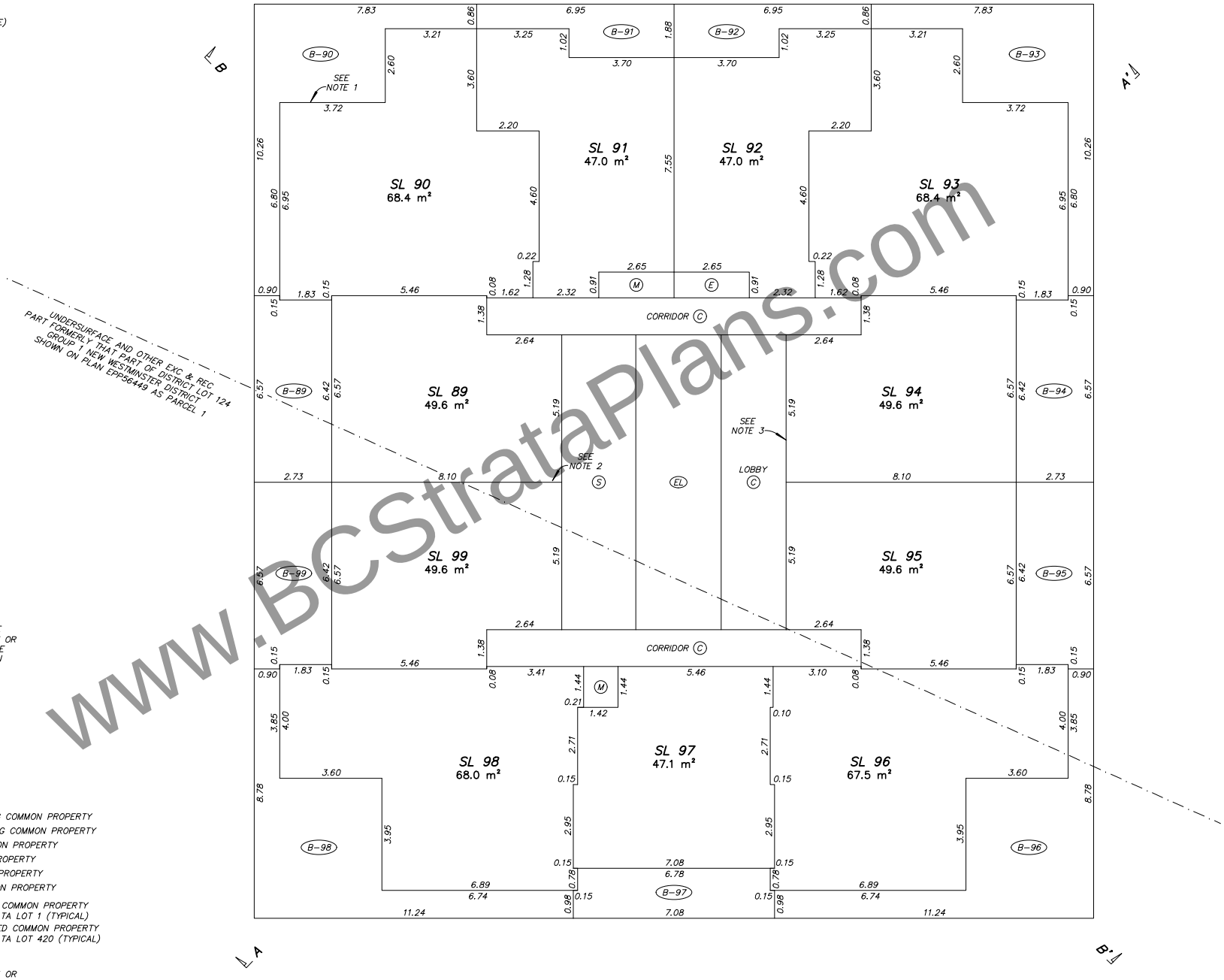

NOTES:

1. STRATA LOT BOUNDARY EXTERIOR FACE OF EXTERIOR WALLS (TYPICAL)
2. STRATA LOT BOUNDARY CENTRELINE OF DEMISING WALLS BETWEEN STRATA LOTS (TYPICAL)
3. STRATA LOT BOUNDARY EXTERIOR FACE OF WALLS ADJACENT TO COMMON AREAS (TYPICAL)
4. STRATA LOT BOUNDARY CENTRELINE FLOOR/CEILING (TYPICAL)
5. UPPER LIMIT OF LCP IS EXTENSION OF THE CENTRELINE OF THE FLOOR/CEILING ABOVE OR WHERE THERE IS NO FLOOR ABOVE, BY THE AVERAGE HEIGHT OF A STRATA LOT WITHIN THE SAME BUILDING (TYPICAL)

LEGEND

m²	DENOTES SQUARE METRES
SL	DENOTES STRATA LOT
PT	DENOTES PART
T	DENOTES TOTAL
Ex.	DENOTES EXPLANATORY
(C)	DENOTES COMMON PROPERTY
(E)	DENOTES ELECTRICAL ROOM BEING COMMON PROPERTY
(M)	DENOTES MECHANICAL ROOM BEING COMMON PROPERTY
(V)	DENOTES VESTIBULE BEING COMMON PROPERTY
(D)	DENOTES DUCT BEING COMMON PROPERTY
(S)	DENOTES STAIRS BEING COMMON PROPERTY
(EL)	DENOTES ELEVATOR BEING COMMON PROPERTY
(B-1)	DENOTES BALCONY BEING LIMITED COMMON PROPERTY FOR THE EXCLUSIVE USE OF STRATA LOT 1 (TYPICAL)
(RD-420)	DENOTES ROOF DECK BEING LIMITED COMMON PROPERTY FOR THE EXCLUSIVE USE OF STRATA LOT 420 (TYPICAL)

LCP AREAS ARE DEFINED AS TO HEIGHT BY THE CENTRE OF THE FLOOR ABOVE OR ITS EXTENSION OR WHERE THERE IS NO FLOOR ABOVE, BY THE AVERAGE HEIGHT OF A STRATA LOT WITHIN THE SAME BUILDING, UNLESS OTHERWISE NOTED

SECTION ARROWS POINT IN THE DIRECTION OF VIEW

BUTLER SUNDVICK

JESSE MORIN, BCLS
Date: SEPTEMBER 16, 2022
File: 4772\Strata\Final
Dwg: 4772-FS

www.BCStrataPlans.com

STRATA PLAN EPS8443

TOWER 1
LEVEL 12

0 5 10

SCALE 1 : 100 DISTANCES ARE IN METRES

THE INTENDED PLOT SCALE OF THIS PLAN IS 560 mm IN WIDTH BY 432 mm IN HEIGHT (C SIZE) WHEN PLOTTED AT A SCALE OF 1:100.

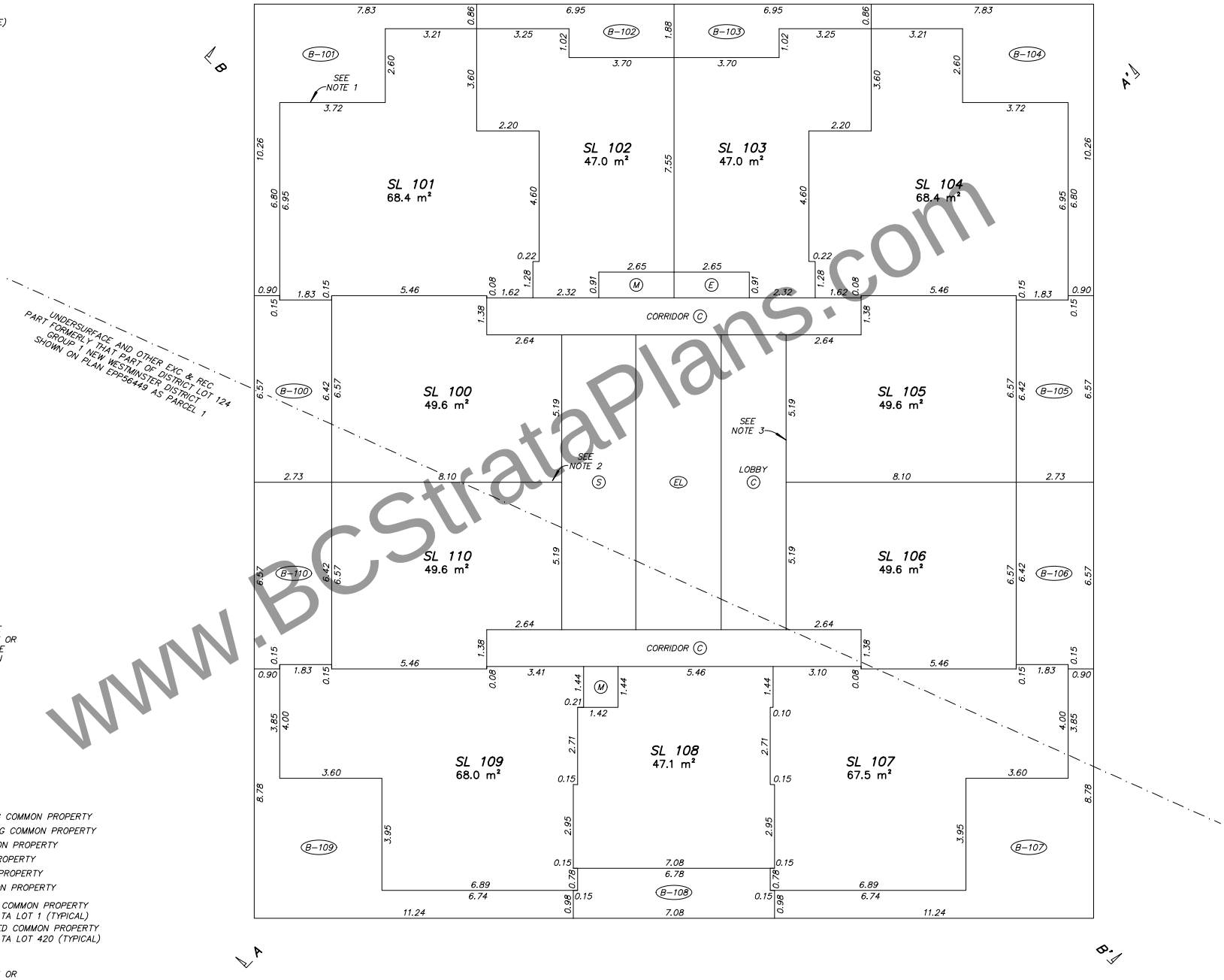

NOTES:

1. STRATA LOT BOUNDARY EXTERIOR FACE OF EXTERIOR WALLS (TYPICAL)
2. STRATA LOT BOUNDARY CENTRELINE OF DEMISING WALLS BETWEEN STRATA LOTS (TYPICAL)
3. STRATA LOT BOUNDARY EXTERIOR FACE OF WALLS ADJACENT TO COMMON AREAS (TYPICAL)
4. STRATA LOT BOUNDARY CENTRELINE FLOOR/CEILING (TYPICAL)
5. UPPER LIMIT OF LCP IS EXTENSION OF THE CENTRELINE OF THE FLOOR/CEILING ABOVE OR WHERE THERE IS NO FLOOR ABOVE, BY THE AVERAGE HEIGHT OF A STRATA LOT WITHIN THE SAME BUILDING (TYPICAL)

LEGEND

m²	DENOTES SQUARE METRES
SL	DENOTES STRATA LOT
PT	DENOTES PART
T	DENOTES TOTAL
Ex.	DENOTES EXPLANATORY
(C)	DENOTES COMMON PROPERTY
(E)	DENOTES ELECTRICAL ROOM BEING COMMON PROPERTY
(M)	DENOTES MECHANICAL ROOM BEING COMMON PROPERTY
(V)	DENOTES VESTIBULE BEING COMMON PROPERTY
(D)	DENOTES DUCT BEING COMMON PROPERTY
(S)	DENOTES STAIRS BEING COMMON PROPERTY
(EL)	DENOTES ELEVATOR BEING COMMON PROPERTY
(B-1)	DENOTES BALCONY BEING LIMITED COMMON PROPERTY FOR THE EXCLUSIVE USE OF STRATA LOT 1 (TYPICAL)
(RD-420)	DENOTES ROOF DECK BEING LIMITED COMMON PROPERTY FOR THE EXCLUSIVE USE OF STRATA LOT 420 (TYPICAL)

LCP AREAS ARE DEFINED AS TO HEIGHT BY THE CENTRE OF THE FLOOR ABOVE OR ITS EXTENSION OR WHERE THERE IS NO FLOOR ABOVE, BY THE AVERAGE HEIGHT OF A STRATA LOT WITHIN THE SAME BUILDING, UNLESS OTHERWISE NOTED

SECTION ARROWS POINT IN THE DIRECTION OF VIEW

www.BCStrataPlans.com

BUTLER SUNDVICK

JESSE MORIN, BCLS
Date: SEPTEMBER 16, 2022
File: 4772\Strata\Final
Dwg: 4772-FS

STRATA PLAN EPS8443

TOWER 1
LEVEL 13

0 5 10

SCALE 1 : 100 DISTANCES ARE IN METRES

THE INTENDED PLOT SCALE OF THIS PLAN IS 560 mm IN WIDTH BY 432 mm IN HEIGHT (C SIZE) WHEN PLOTTED AT A SCALE OF 1:100.

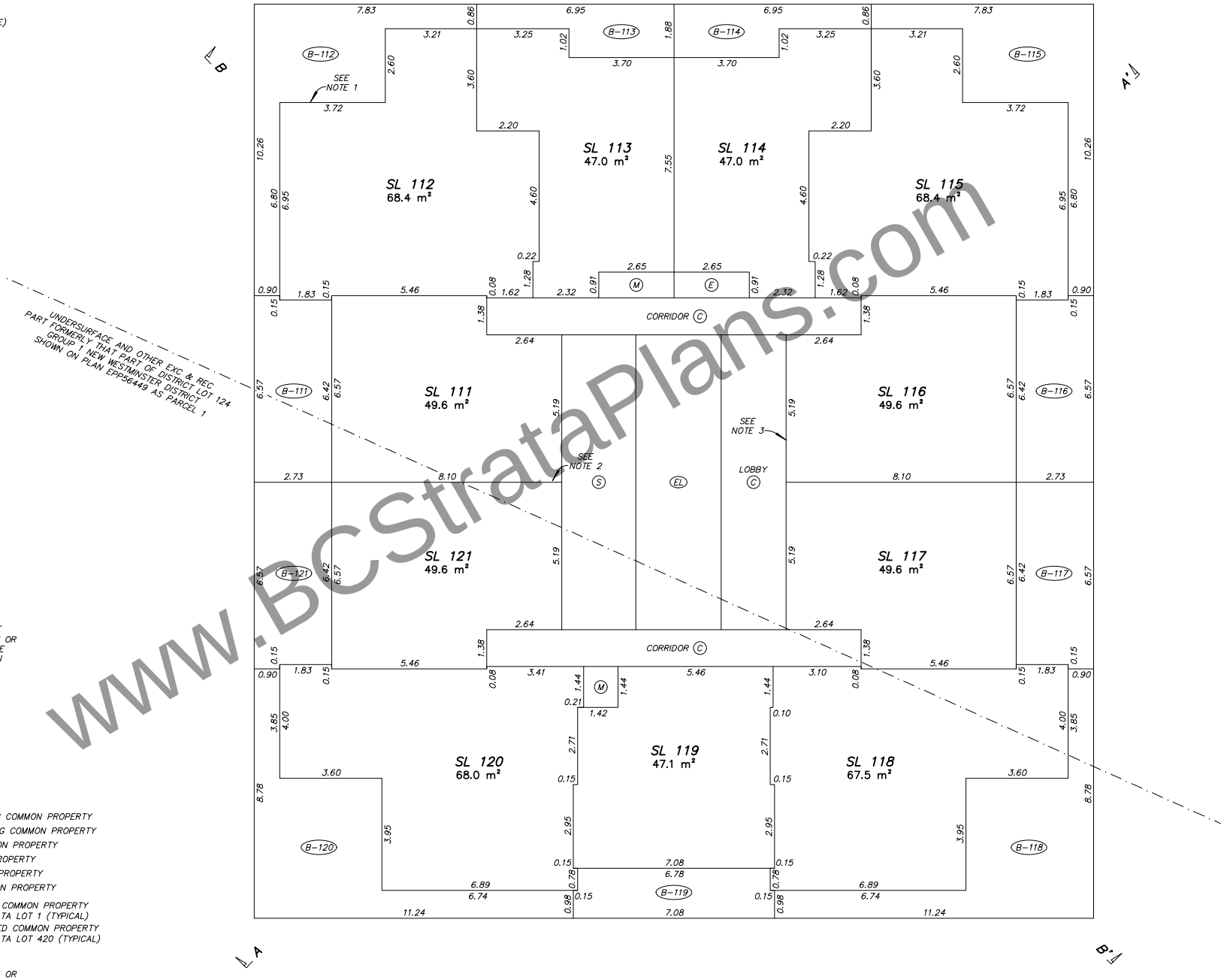

NOTES:

1. STRATA LOT BOUNDARY EXTERIOR FACE OF EXTERIOR WALLS (TYPICAL)
2. STRATA LOT BOUNDARY CENTRELINE OF DEMISING WALLS BETWEEN STRATA LOTS (TYPICAL)
3. STRATA LOT BOUNDARY EXTERIOR FACE OF WALLS ADJACENT TO COMMON AREAS (TYPICAL)
4. STRATA LOT BOUNDARY CENTRELINE FLOOR/CEILING (TYPICAL)
5. UPPER LIMIT OF LCP IS EXTENSION OF THE CENTRELINE OF THE FLOOR/CEILING ABOVE OR WHERE THERE IS NO FLOOR ABOVE, BY THE AVERAGE HEIGHT OF A STRATA LOT WITHIN THE SAME BUILDING (TYPICAL)

LEGEND

m²	DENOTES SQUARE METRES
SL	DENOTES STRATA LOT
PT	DENOTES PART
T	DENOTES TOTAL
Ex.	DENOTES EXPLANATORY
(C)	DENOTES COMMON PROPERTY
(E)	DENOTES ELECTRICAL ROOM BEING COMMON PROPERTY
(M)	DENOTES MECHANICAL ROOM BEING COMMON PROPERTY
(V)	DENOTES VESTIBULE BEING COMMON PROPERTY
(D)	DENOTES DUCT BEING COMMON PROPERTY
(S)	DENOTES STAIRS BEING COMMON PROPERTY
(EL)	DENOTES ELEVATOR BEING COMMON PROPERTY
(B-1)	DENOTES BALCONY BEING LIMITED COMMON PROPERTY FOR THE EXCLUSIVE USE OF STRATA LOT 1 (TYPICAL)
(RD-420)	DENOTES ROOF DECK BEING LIMITED COMMON PROPERTY FOR THE EXCLUSIVE USE OF STRATA LOT 420 (TYPICAL)

LCP AREAS ARE DEFINED AS TO HEIGHT BY THE CENTRE OF THE FLOOR ABOVE OR ITS EXTENSION OR WHERE THERE IS NO FLOOR ABOVE, BY THE AVERAGE HEIGHT OF A STRATA LOT WITHIN THE SAME BUILDING, UNLESS OTHERWISE NOTED

SECTION ARROWS POINT IN THE DIRECTION OF VIEW

www.BCStrataPlans.com

BUTLER SUNDVICK

JESSE MORIN, BCLS
Date: SEPTEMBER 16, 2022
File: 4772\Strata\Final
Dwg: 4772-FS

TOWER 1
LEVEL 14

0 5 10

SCALE 1 : 100 DISTANCES ARE IN METRES

THE INTENDED PLOT SCALE OF THIS PLAN IS 560 mm IN WIDTH BY 432 mm IN HEIGHT (C SIZE) WHEN PLOTTED AT A SCALE OF 1:100.

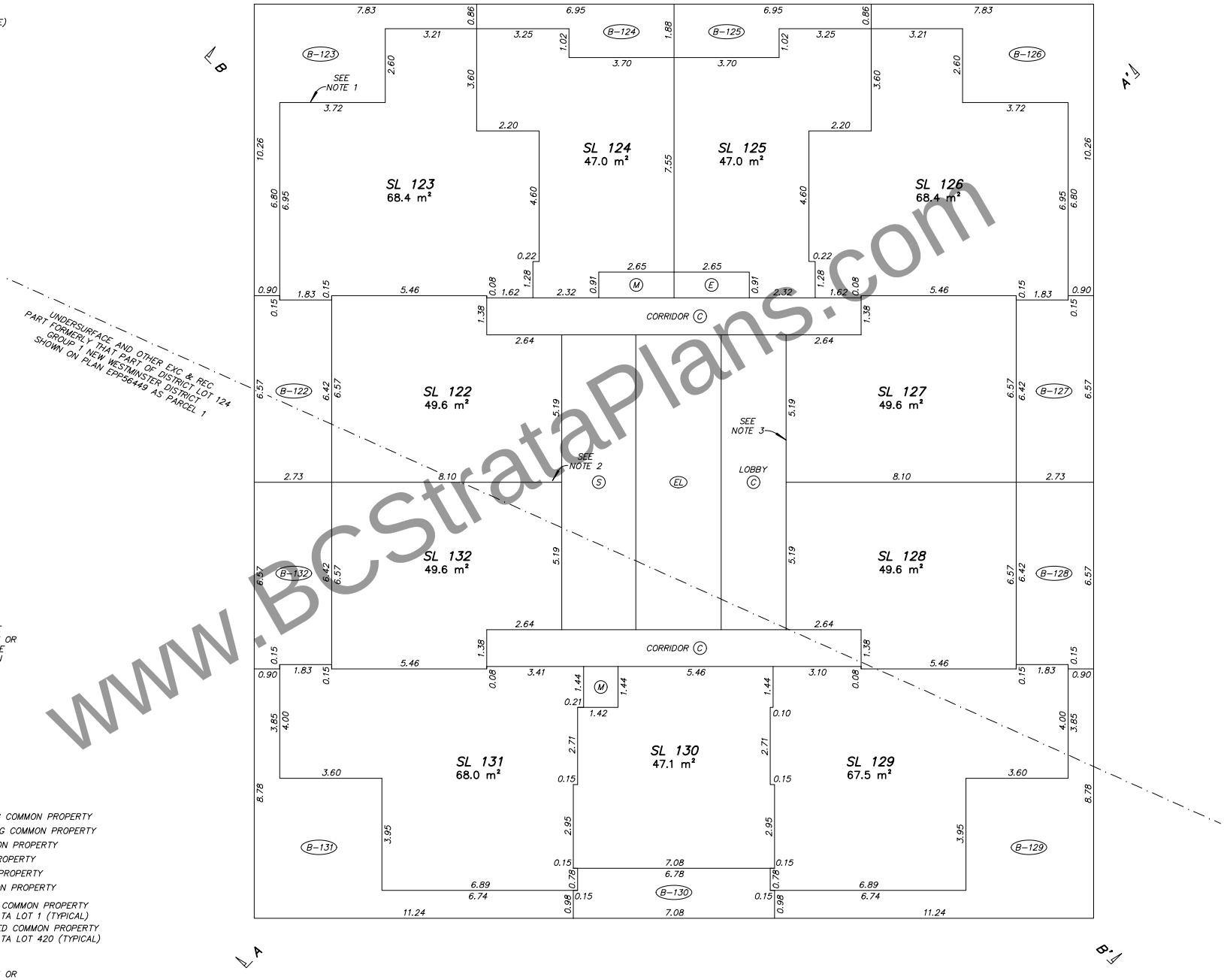

NOTES:

1. STRATA LOT BOUNDARY EXTERIOR FACE OF EXTERIOR WALLS (TYPICAL)
2. STRATA LOT BOUNDARY CENTRELINE OF DEMISING WALLS BETWEEN STRATA LOTS (TYPICAL)
3. STRATA LOT BOUNDARY EXTERIOR FACE OF WALLS ADJACENT TO COMMON AREAS (TYPICAL)
4. STRATA LOT BOUNDARY CENTRELINE FLOOR/CEILING (TYPICAL)
5. UPPER LIMIT OF LCP IS EXTENSION OF THE CENTRELINE OF THE FLOOR/CEILING ABOVE OR WHERE THERE IS NO FLOOR ABOVE, BY THE AVERAGE HEIGHT OF A STRATA LOT WITHIN THE SAME BUILDING (TYPICAL)

LEGEND

m²	DENOTES SQUARE METRES
SL	DENOTES STRATA LOT
PT	DENOTES PART
T	DENOTES TOTAL
Ex.	DENOTES EXPLANATORY
(C)	DENOTES COMMON PROPERTY
(E)	DENOTES ELECTRICAL ROOM BEING COMMON PROPERTY
(M)	DENOTES MECHANICAL ROOM BEING COMMON PROPERTY
(V)	DENOTES VESTIBULE BEING COMMON PROPERTY
(D)	DENOTES DUCT BEING COMMON PROPERTY
(S)	DENOTES STAIRS BEING COMMON PROPERTY
(EL)	DENOTES ELEVATOR BEING COMMON PROPERTY
(B-1)	DENOTES BALCONY BEING LIMITED COMMON PROPERTY FOR THE EXCLUSIVE USE OF STRATA LOT 1 (TYPICAL)
(RD-420)	DENOTES ROOF DECK BEING LIMITED COMMON PROPERTY FOR THE EXCLUSIVE USE OF STRATA LOT 420 (TYPICAL)

LCP AREAS ARE DEFINED AS TO HEIGHT BY THE CENTRE OF THE FLOOR ABOVE OR ITS EXTENSION OR WHERE THERE IS NO FLOOR ABOVE, BY THE AVERAGE HEIGHT OF A STRATA LOT WITHIN THE SAME BUILDING, UNLESS OTHERWISE NOTED

SECTION ARROWS POINT IN THE DIRECTION OF VIEW

www.BCStrataPlans.com

BUTLER SUNDVICK

JESSE MORIN, BCLS
Date: SEPTEMBER 16, 2022
File: 4772\Strata\Final
Dwg: 4772-FS

STRATA PLAN EPS8443

TOWER 1
LEVEL 15

0 5 10

SCALE 1 : 100 DISTANCES ARE IN METRES

THE INTENDED PLOT SCALE OF THIS PLAN IS 560 mm IN WIDTH BY 432 mm IN HEIGHT (C SIZE) WHEN PLOTTED AT A SCALE OF 1:100.

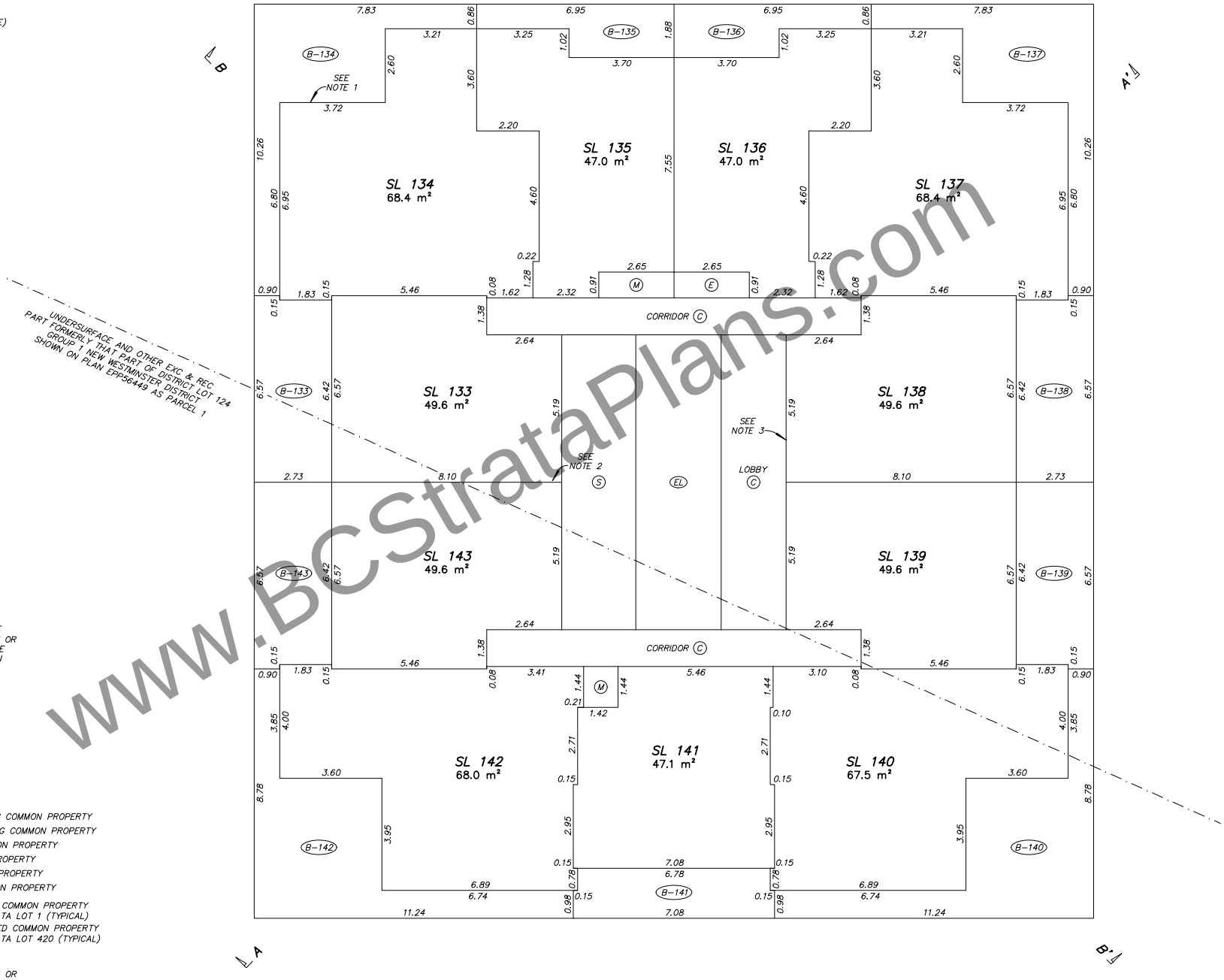

NOTES:

1. STRATA LOT BOUNDARY EXTERIOR FACE OF EXTERIOR WALLS (TYPICAL)
2. STRATA LOT BOUNDARY CENTRELINE OF DEMISING WALLS BETWEEN STRATA LOTS (TYPICAL)
3. STRATA LOT BOUNDARY EXTERIOR FACE OF WALLS ADJACENT TO COMMON AREAS (TYPICAL)
4. STRATA LOT BOUNDARY CENTRELINE FLOOR/CEILING (TYPICAL)
5. UPPER LIMIT OF LCP IS EXTENSION OF THE CENTRELINE OF THE FLOOR/CEILING ABOVE OR WHERE THERE IS NO FLOOR ABOVE, BY THE AVERAGE HEIGHT OF A STRATA LOT WITHIN THE SAME BUILDING (TYPICAL)

LEGEND

m²	DENOTES SQUARE METRES
SL	DENOTES STRATA LOT
PT	DENOTES PART
T	DENOTES TOTAL
Ex.	DENOTES EXPLANATORY
(C)	DENOTES COMMON PROPERTY
(E)	DENOTES ELECTRICAL ROOM BEING COMMON PROPERTY
(M)	DENOTES MECHANICAL ROOM BEING COMMON PROPERTY
(V)	DENOTES VESTIBULE BEING COMMON PROPERTY
(D)	DENOTES DUCT BEING COMMON PROPERTY
(S)	DENOTES STAIRS BEING COMMON PROPERTY
(EL)	DENOTES ELEVATOR BEING COMMON PROPERTY
(B-1)	DENOTES BALCONY BEING LIMITED COMMON PROPERTY FOR THE EXCLUSIVE USE OF STRATA LOT 1 (TYPICAL)
(RD-420)	DENOTES ROOF DECK BEING LIMITED COMMON PROPERTY FOR THE EXCLUSIVE USE OF STRATA LOT 420 (TYPICAL)

LCP AREAS ARE DEFINED AS TO HEIGHT BY THE CENTRE OF THE FLOOR ABOVE OR ITS EXTENSION OR WHERE THERE IS NO FLOOR ABOVE, BY THE AVERAGE HEIGHT OF A STRATA LOT WITHIN THE SAME BUILDING, UNLESS OTHERWISE NOTED

SECTION ARROWS POINT IN THE DIRECTION OF VIEW

BUTLER SUNDVICK

JESSE MORIN, BCLS
Date: SEPTEMBER 16, 2022
File: 4772\Strata\Final
Dwg: 4772-FS

www.BCStrataPlans.com

STRATA PLAN EPS8443

TOWER 1
LEVEL 16

0 5 10

SCALE 1 : 100 DISTANCES ARE IN METRES

THE INTENDED PLOT SCALE OF THIS PLAN IS 560 mm IN WIDTH BY 432 mm IN HEIGHT (C SIZE) WHEN PLOTTED AT A SCALE OF 1:100.

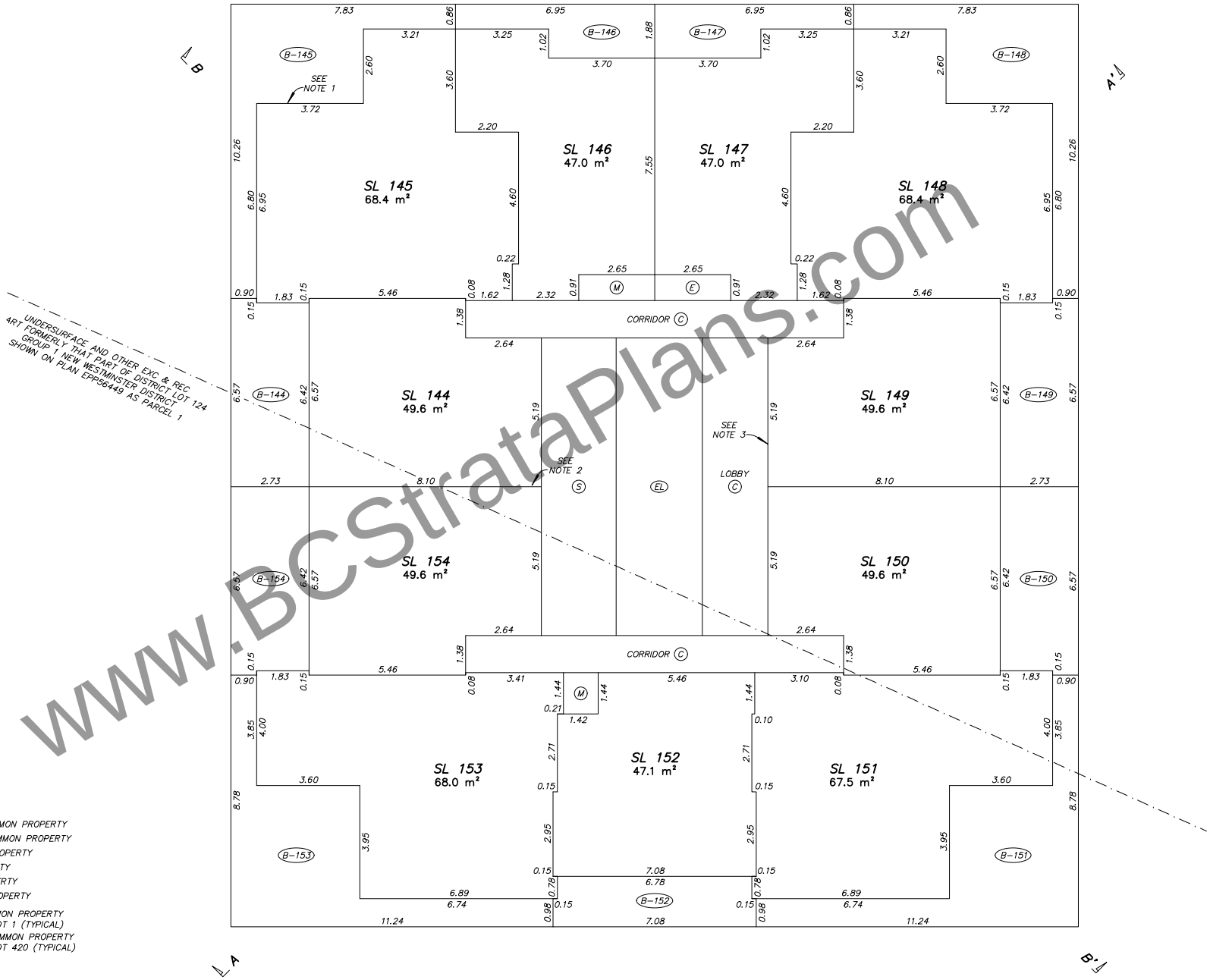

NOTES:

1. STRATA LOT BOUNDARY EXTERIOR FACE OF EXTERIOR WALLS (TYPICAL)
2. STRATA LOT BOUNDARY CENTRELINE OF DEMISING WALLS BETWEEN STRATA LOTS (TYPICAL)
3. STRATA LOT BOUNDARY EXTERIOR FACE OF WALLS ADJACENT TO COMMON AREAS (TYPICAL)
4. STRATA LOT BOUNDARY CENTRELINE FLOOR/CEILING (TYPICAL)
5. UPPER LIMIT OF LCP IS EXTENSION OF THE CENTRELINE OF THE FLOOR/CEILING ABOVE OR WHERE THERE IS NO FLOOR ABOVE, BY THE AVERAGE HEIGHT OF A STRATA LOT WITHIN THE SAME BUILDING (TYPICAL)

LEGEND

m²	DENOTES SQUARE METRES
SL	DENOTES STRATA LOT
PT	DENOTES PART
T	DENOTES TOTAL
Ex.	DENOTES EXPLANATORY
C	DENOTES COMMON PROPERTY
E	DENOTES ELECTRICAL ROOM BEING COMMON PROPERTY
M	DENOTES MECHANICAL ROOM BEING COMMON PROPERTY
V	DENOTES VESTIBULE BEING COMMON PROPERTY
D	DENOTES DUCT BEING COMMON PROPERTY
S	DENOTES STAIRS BEING COMMON PROPERTY
EL	DENOTES ELEVATOR BEING COMMON PROPERTY
B-1	DENOTES BALCONY BEING LIMITED COMMON PROPERTY FOR THE EXCLUSIVE USE OF STRATA LOT 1 (TYPICAL)
RD-420	DENOTES ROOF DECK BEING LIMITED COMMON PROPERTY FOR THE EXCLUSIVE USE OF STRATA LOT 420 (TYPICAL)

LCP AREAS ARE DEFINED AS TO HEIGHT BY THE CENTRE OF THE FLOOR ABOVE OR ITS EXTENSION OR WHERE THERE IS NO FLOOR ABOVE, BY THE AVERAGE HEIGHT OF A STRATA LOT WITHIN THE SAME BUILDING, UNLESS OTHERWISE NOTED

SECTION ARROWS POINT IN THE DIRECTION OF VIEW

www.BCStrataPlans.com

BUTLER SUNDVICK

JESSE MORIN, BCLS
Date: SEPTEMBER 16, 2022
File: 4772\Strata\Final
Dwg: 4772-FS

STRATA PLAN EPS8443

TOWER 1
LEVEL 17

0 5 10

SCALE 1 : 100 DISTANCES ARE IN METRES

THE INTENDED PLOT SCALE OF THIS PLAN IS 560 mm IN WIDTH BY 432 mm IN HEIGHT (C SIZE) WHEN PLOTTED AT A SCALE OF 1:100.

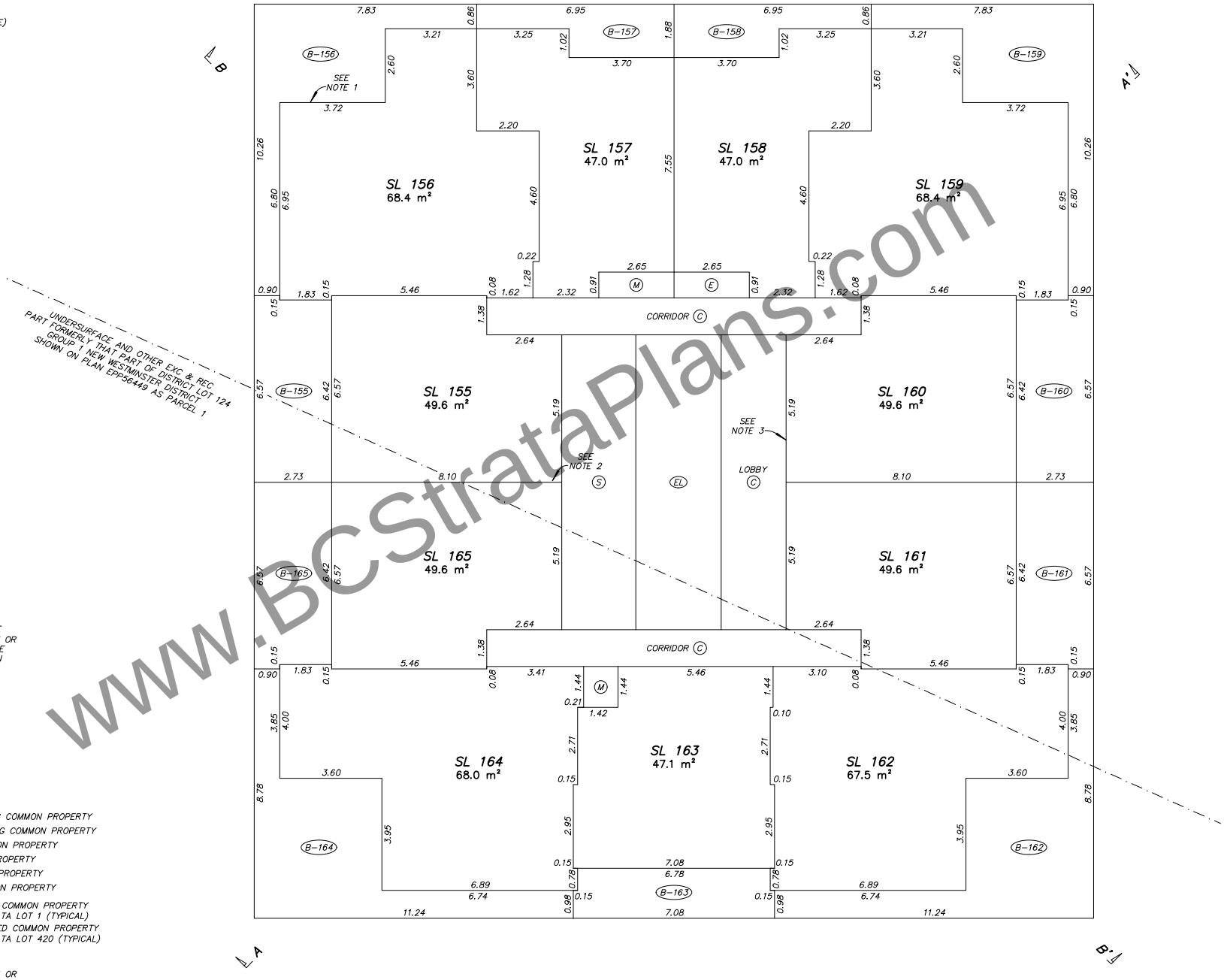

NOTES:

1. STRATA LOT BOUNDARY EXTERIOR FACE OF EXTERIOR WALLS (TYPICAL)
2. STRATA LOT BOUNDARY CENTRELINE OF DEMISING WALLS BETWEEN STRATA LOTS (TYPICAL)
3. STRATA LOT BOUNDARY EXTERIOR FACE OF WALLS ADJACENT TO COMMON AREAS (TYPICAL)
4. STRATA LOT BOUNDARY CENTRELINE FLOOR/CEILING (TYPICAL)
5. UPPER LIMIT OF LCP IS EXTENSION OF THE CENTRELINE OF THE FLOOR/CEILING ABOVE OR WHERE THERE IS NO FLOOR ABOVE, BY THE AVERAGE HEIGHT OF A STRATA LOT WITHIN THE SAME BUILDING (TYPICAL)

LEGEND

m²	DENOTES SQUARE METRES
SL	DENOTES STRATA LOT
PT	DENOTES PART
T	DENOTES TOTAL
Ex.	DENOTES EXPLANATORY
(C)	DENOTES COMMON PROPERTY
(E)	DENOTES ELECTRICAL ROOM BEING COMMON PROPERTY
(M)	DENOTES MECHANICAL ROOM BEING COMMON PROPERTY
(V)	DENOTES VESTIBULE BEING COMMON PROPERTY
(D)	DENOTES DUCT BEING COMMON PROPERTY
(S)	DENOTES STAIRS BEING COMMON PROPERTY
(EL)	DENOTES ELEVATOR BEING COMMON PROPERTY
(B-1)	DENOTES BALCONY BEING LIMITED COMMON PROPERTY FOR THE EXCLUSIVE USE OF STRATA LOT 1 (TYPICAL)
(RD-420)	DENOTES ROOF DECK BEING LIMITED COMMON PROPERTY FOR THE EXCLUSIVE USE OF STRATA LOT 420 (TYPICAL)

LCP AREAS ARE DEFINED AS TO HEIGHT BY THE CENTRE OF THE FLOOR ABOVE OR ITS EXTENSION OR WHERE THERE IS NO FLOOR ABOVE, BY THE AVERAGE HEIGHT OF A STRATA LOT WITHIN THE SAME BUILDING, UNLESS OTHERWISE NOTED

SECTION ARROWS POINT IN THE DIRECTION OF VIEW

www.BCStrataPlans.com

BUTLER SUNDVICK

JESSE MORIN, BCLS
Date: SEPTEMBER 16, 2022
File: 4772\Strata\Final
Dwg: 4772-FS

STRATA PLAN EPS8443

TOWER 1
LEVEL 18

0 5 10

SCALE 1 : 100 DISTANCES ARE IN METRES

THE INTENDED PLOT SCALE OF THIS PLAN IS 560 mm IN WIDTH BY 432 mm IN HEIGHT (C SIZE) WHEN PLOTTED AT A SCALE OF 1:100.

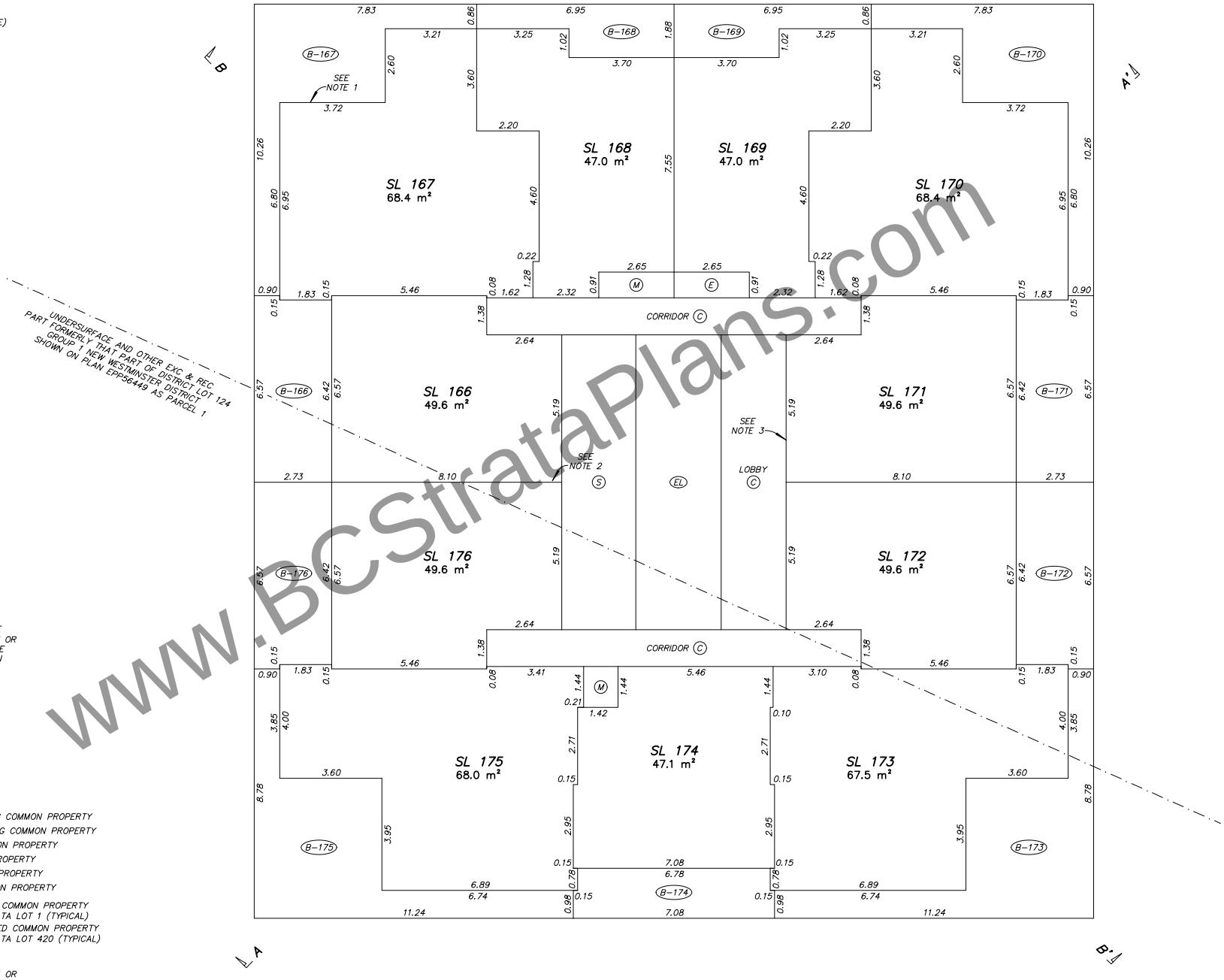

NOTES:

1. STRATA LOT BOUNDARY EXTERIOR FACE OF EXTERIOR WALLS (TYPICAL)
2. STRATA LOT BOUNDARY CENTRELINE OF DEMISING WALLS BETWEEN STRATA LOTS (TYPICAL)
3. STRATA LOT BOUNDARY EXTERIOR FACE OF WALLS ADJACENT TO COMMON AREAS (TYPICAL)
4. STRATA LOT BOUNDARY CENTRELINE FLOOR/CEILING (TYPICAL)
5. UPPER LIMIT OF LCP IS EXTENSION OF THE CENTRELINE OF THE FLOOR/CEILING ABOVE OR WHERE THERE IS NO FLOOR ABOVE, BY THE AVERAGE HEIGHT OF A STRATA LOT WITHIN THE SAME BUILDING (TYPICAL)

LEGEND

m²	DENOTES SQUARE METRES
SL	DENOTES STRATA LOT
PT	DENOTES PART
T	DENOTES TOTAL
Ex.	DENOTES EXPLANATORY
(C)	DENOTES COMMON PROPERTY
(E)	DENOTES ELECTRICAL ROOM BEING COMMON PROPERTY
(M)	DENOTES MECHANICAL ROOM BEING COMMON PROPERTY
(V)	DENOTES VESTIBULE BEING COMMON PROPERTY
(D)	DENOTES DUCT BEING COMMON PROPERTY
(S)	DENOTES STAIRS BEING COMMON PROPERTY
(EL)	DENOTES ELEVATOR BEING COMMON PROPERTY
(B-1)	DENOTES BALCONY BEING LIMITED COMMON PROPERTY FOR THE EXCLUSIVE USE OF STRATA LOT 1 (TYPICAL)
(RD-420)	DENOTES ROOF DECK BEING LIMITED COMMON PROPERTY FOR THE EXCLUSIVE USE OF STRATA LOT 420 (TYPICAL)

LCP AREAS ARE DEFINED AS TO HEIGHT BY THE CENTRE OF THE FLOOR ABOVE OR ITS EXTENSION OR WHERE THERE IS NO FLOOR ABOVE, BY THE AVERAGE HEIGHT OF A STRATA LOT WITHIN THE SAME BUILDING, UNLESS OTHERWISE NOTED

SECTION ARROWS POINT IN THE DIRECTION OF VIEW

www.BCStrataPlans.com

BUTLER SUNDVICK

JESSE MORIN, BCLS
Date: SEPTEMBER 16, 2022
File: 4772\Strata\Final
Dwg: 4772-FS

STRATA PLAN EPS8443

TOWER 1
LEVEL 19

0 5 10

SCALE 1 : 100 DISTANCES ARE IN METRES

THE INTENDED PLOT SCALE OF THIS PLAN IS 560 mm IN WIDTH BY 432 mm IN HEIGHT (C SIZE) WHEN PLOTTED AT A SCALE OF 1:100.

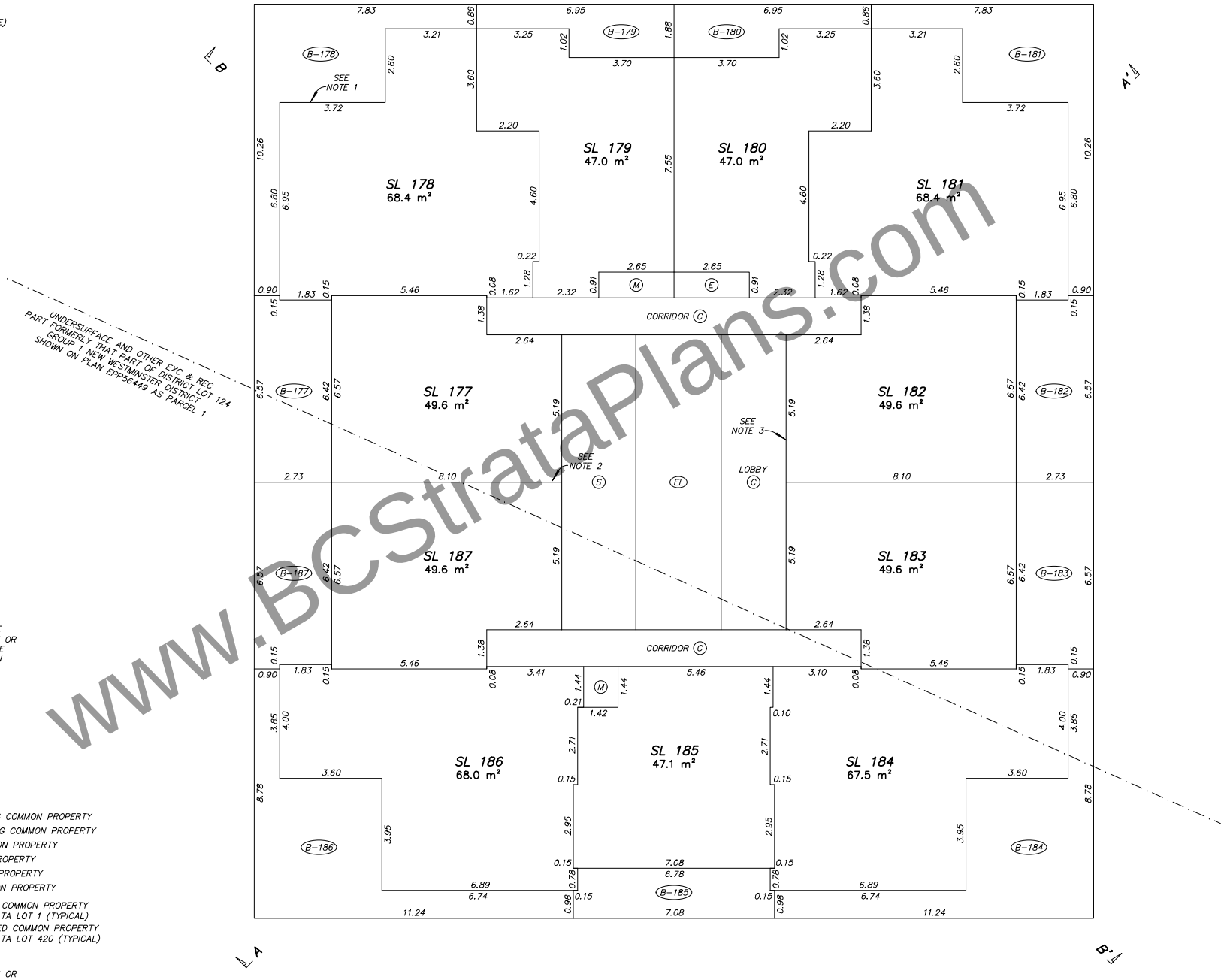

NOTES:

1. STRATA LOT BOUNDARY EXTERIOR FACE OF EXTERIOR WALLS (TYPICAL)
2. STRATA LOT BOUNDARY CENTRELINE OF DEMISING WALLS BETWEEN STRATA LOTS (TYPICAL)
3. STRATA LOT BOUNDARY EXTERIOR FACE OF WALLS ADJACENT TO COMMON AREAS (TYPICAL)
4. STRATA LOT BOUNDARY CENTRELINE FLOOR/CEILING (TYPICAL)
5. UPPER LIMIT OF LCP IS EXTENSION OF THE CENTRELINE OF THE FLOOR/CEILING ABOVE OR WHERE THERE IS NO FLOOR ABOVE, BY THE AVERAGE HEIGHT OF A STRATA LOT WITHIN THE SAME BUILDING (TYPICAL)

LEGEND

m²	DENOTES SQUARE METRES
SL	DENOTES STRATA LOT
PT	DENOTES PART
T	DENOTES TOTAL
Ex.	DENOTES EXPLANATORY
(C)	DENOTES COMMON PROPERTY
(E)	DENOTES ELECTRICAL ROOM BEING COMMON PROPERTY
(M)	DENOTES MECHANICAL ROOM BEING COMMON PROPERTY
(V)	DENOTES VESTIBULE BEING COMMON PROPERTY
(D)	DENOTES DUCT BEING COMMON PROPERTY
(S)	DENOTES STAIRS BEING COMMON PROPERTY
(EL)	DENOTES ELEVATOR BEING COMMON PROPERTY
(B-1)	DENOTES BALCONY BEING LIMITED COMMON PROPERTY FOR THE EXCLUSIVE USE OF STRATA LOT 1 (TYPICAL)
(RD-420)	DENOTES ROOF DECK BEING LIMITED COMMON PROPERTY FOR THE EXCLUSIVE USE OF STRATA LOT 420 (TYPICAL)

LCP AREAS ARE DEFINED AS TO HEIGHT BY THE CENTRE OF THE FLOOR ABOVE OR ITS EXTENSION OR WHERE THERE IS NO FLOOR ABOVE, BY THE AVERAGE HEIGHT OF A STRATA LOT WITHIN THE SAME BUILDING, UNLESS OTHERWISE NOTED

SECTION ARROWS POINT IN THE DIRECTION OF VIEW

www.BCStrataPlans.com

BUTLER SUNDVICK

JESSE MORIN, BCLS
Date: SEPTEMBER 16, 2022
File: 4772\Strata\Final
Dwg: 4772-FS

STRATA PLAN EPS8443

TOWER 1
LEVEL 20

0 5 10

SCALE 1 : 100 DISTANCES ARE IN METRES

THE INTENDED PLOT SCALE OF THIS PLAN IS 560 mm IN WIDTH BY 432 mm IN HEIGHT (C SIZE) WHEN PLOTTED AT A SCALE OF 1:100.

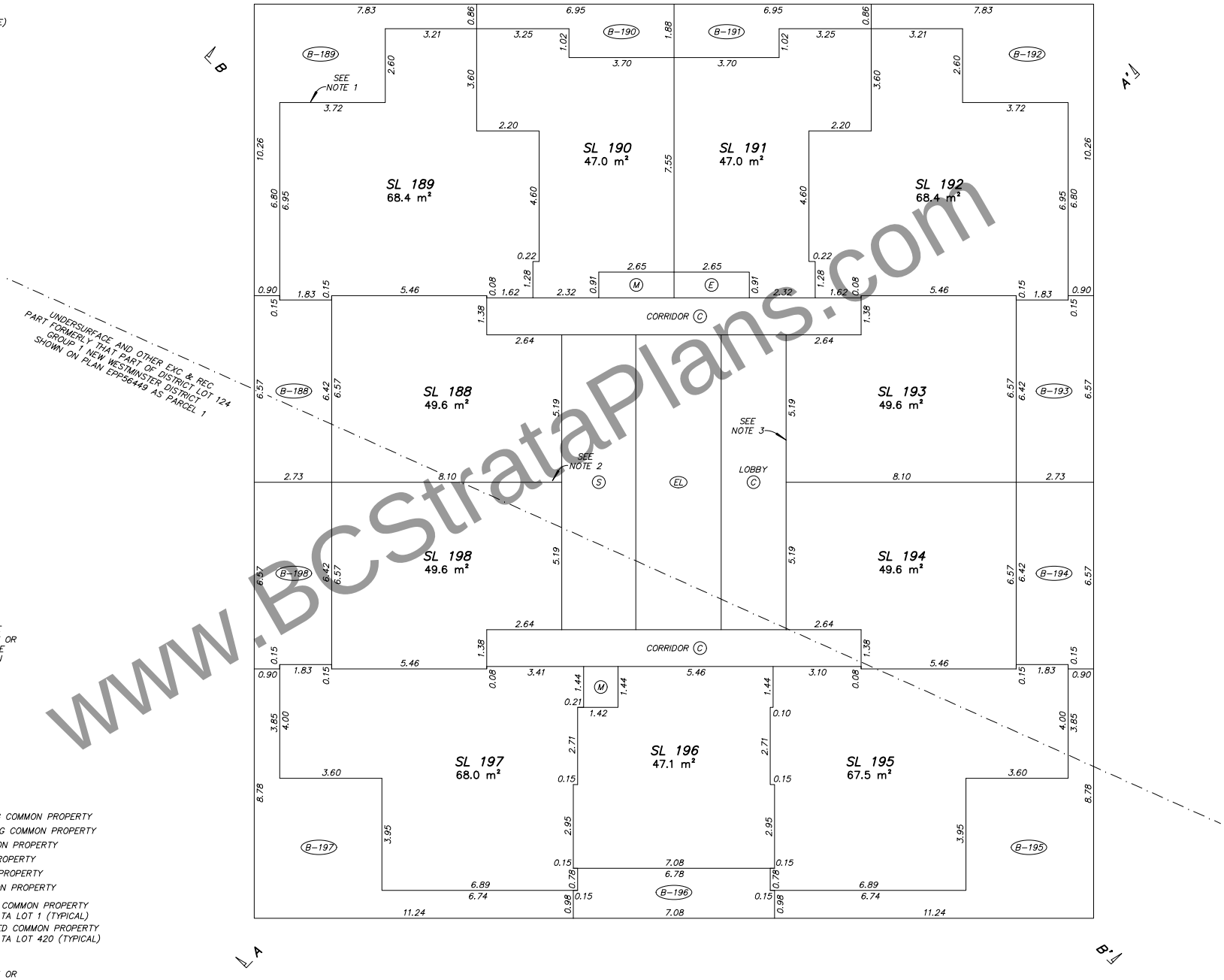

NOTES:

1. STRATA LOT BOUNDARY EXTERIOR FACE OF EXTERIOR WALLS (TYPICAL)
2. STRATA LOT BOUNDARY CENTRELINE OF DEMISING WALLS BETWEEN STRATA LOTS (TYPICAL)
3. STRATA LOT BOUNDARY EXTERIOR FACE OF WALLS ADJACENT TO COMMON AREAS (TYPICAL)
4. STRATA LOT BOUNDARY CENTRELINE FLOOR/CEILING (TYPICAL)
5. UPPER LIMIT OF LCP IS EXTENSION OF THE CENTRELINE OF THE FLOOR/CEILING ABOVE OR WHERE THERE IS NO FLOOR ABOVE, BY THE AVERAGE HEIGHT OF A STRATA LOT WITHIN THE SAME BUILDING (TYPICAL)

LEGEND

m²	DENOTES SQUARE METRES
SL	DENOTES STRATA LOT
PT	DENOTES PART
T	DENOTES TOTAL
Ex.	DENOTES EXPLANATORY
(C)	DENOTES COMMON PROPERTY
(E)	DENOTES ELECTRICAL ROOM BEING COMMON PROPERTY
(M)	DENOTES MECHANICAL ROOM BEING COMMON PROPERTY
(V)	DENOTES VESTIBULE BEING COMMON PROPERTY
(D)	DENOTES DUCT BEING COMMON PROPERTY
(S)	DENOTES STAIRS BEING COMMON PROPERTY
(EL)	DENOTES ELEVATOR BEING COMMON PROPERTY
(B-1)	DENOTES BALCONY BEING LIMITED COMMON PROPERTY FOR THE EXCLUSIVE USE OF STRATA LOT 1 (TYPICAL)
(RD-420)	DENOTES ROOF DECK BEING LIMITED COMMON PROPERTY FOR THE EXCLUSIVE USE OF STRATA LOT 420 (TYPICAL)

LCP AREAS ARE DEFINED AS TO HEIGHT BY THE CENTRE OF THE FLOOR ABOVE OR ITS EXTENSION OR WHERE THERE IS NO FLOOR ABOVE, BY THE AVERAGE HEIGHT OF A STRATA LOT WITHIN THE SAME BUILDING, UNLESS OTHERWISE NOTED

SECTION ARROWS POINT IN THE DIRECTION OF VIEW

www.BCStrataPlans.com

BUTLER SUNDVICK

JESSE MORIN, BCLS
Date: SEPTEMBER 16, 2022
File: 4772\Strata\Final
Dwg: 4772-FS

STRATA PLAN EPS8443

TOWER 1
LEVEL 21

0 5 10

SCALE 1 : 100 DISTANCES ARE IN METRES

THE INTENDED PLOT SCALE OF THIS PLAN IS 560 mm IN WIDTH BY 432 mm IN HEIGHT (C SIZE) WHEN PLOTTED AT A SCALE OF 1:100.

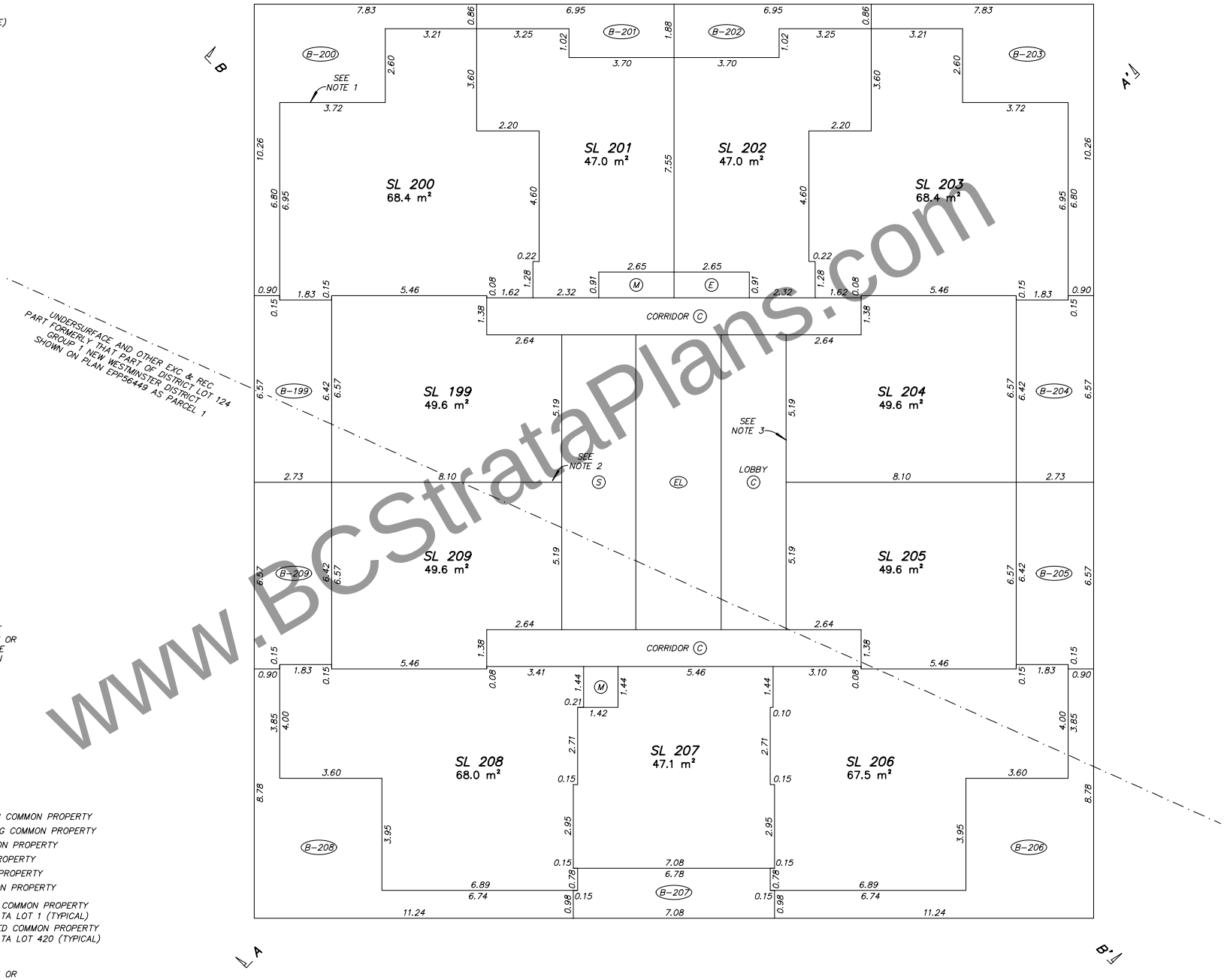

NOTES:

1. STRATA LOT BOUNDARY EXTERIOR FACE OF EXTERIOR WALLS (TYPICAL)
2. STRATA LOT BOUNDARY CENTRELINE OF DEMISING WALLS BETWEEN STRATA LOTS (TYPICAL)
3. STRATA LOT BOUNDARY EXTERIOR FACE OF WALLS ADJACENT TO COMMON AREAS (TYPICAL)
4. STRATA LOT BOUNDARY CENTRELINE FLOOR/CEILING (TYPICAL)
5. UPPER LIMIT OF LCP IS EXTENSION OF THE CENTRELINE OF THE FLOOR/CEILING ABOVE OR WHERE THERE IS NO FLOOR ABOVE, BY THE AVERAGE HEIGHT OF A STRATA LOT WITHIN THE SAME BUILDING (TYPICAL)

LEGEND

m²	DENOTES SQUARE METRES
SL	DENOTES STRATA LOT
PT	DENOTES PART
T	DENOTES TOTAL
Ex.	DENOTES EXPLANATORY
(C)	DENOTES COMMON PROPERTY
(E)	DENOTES ELECTRICAL ROOM BEING COMMON PROPERTY
(M)	DENOTES MECHANICAL ROOM BEING COMMON PROPERTY
(V)	DENOTES VESTIBULE BEING COMMON PROPERTY
(D)	DENOTES DUCT BEING COMMON PROPERTY
(S)	DENOTES STAIRS BEING COMMON PROPERTY
(EL)	DENOTES ELEVATOR BEING COMMON PROPERTY
(B-1)	DENOTES BALCONY BEING LIMITED COMMON PROPERTY FOR THE EXCLUSIVE USE OF STRATA LOT 1 (TYPICAL)
(RD-420)	DENOTES ROOF DECK BEING LIMITED COMMON PROPERTY FOR THE EXCLUSIVE USE OF STRATA LOT 420 (TYPICAL)

LCP AREAS ARE DEFINED AS TO HEIGHT BY THE CENTRE OF THE FLOOR ABOVE OR ITS EXTENSION OR WHERE THERE IS NO FLOOR ABOVE, BY THE AVERAGE HEIGHT OF A STRATA LOT WITHIN THE SAME BUILDING, UNLESS OTHERWISE NOTED

SECTION ARROWS POINT IN THE DIRECTION OF VIEW

www.BCStrataPlans.com

BUTLER SUNDVICK

JESSE MORIN, BCLS
Date: SEPTEMBER 16, 2022
File: 4772\Strata\Final
Dwg: 4772-FS

STRATA PLAN EPS8443

TOWER 1
LEVEL 22

0 5 10

SCALE 1 : 100 DISTANCES ARE IN METRES

THE INTENDED PLOT SCALE OF THIS PLAN IS 560 mm IN WIDTH BY 432 mm IN HEIGHT (C SIZE) WHEN PLOTTED AT A SCALE OF 1:100.

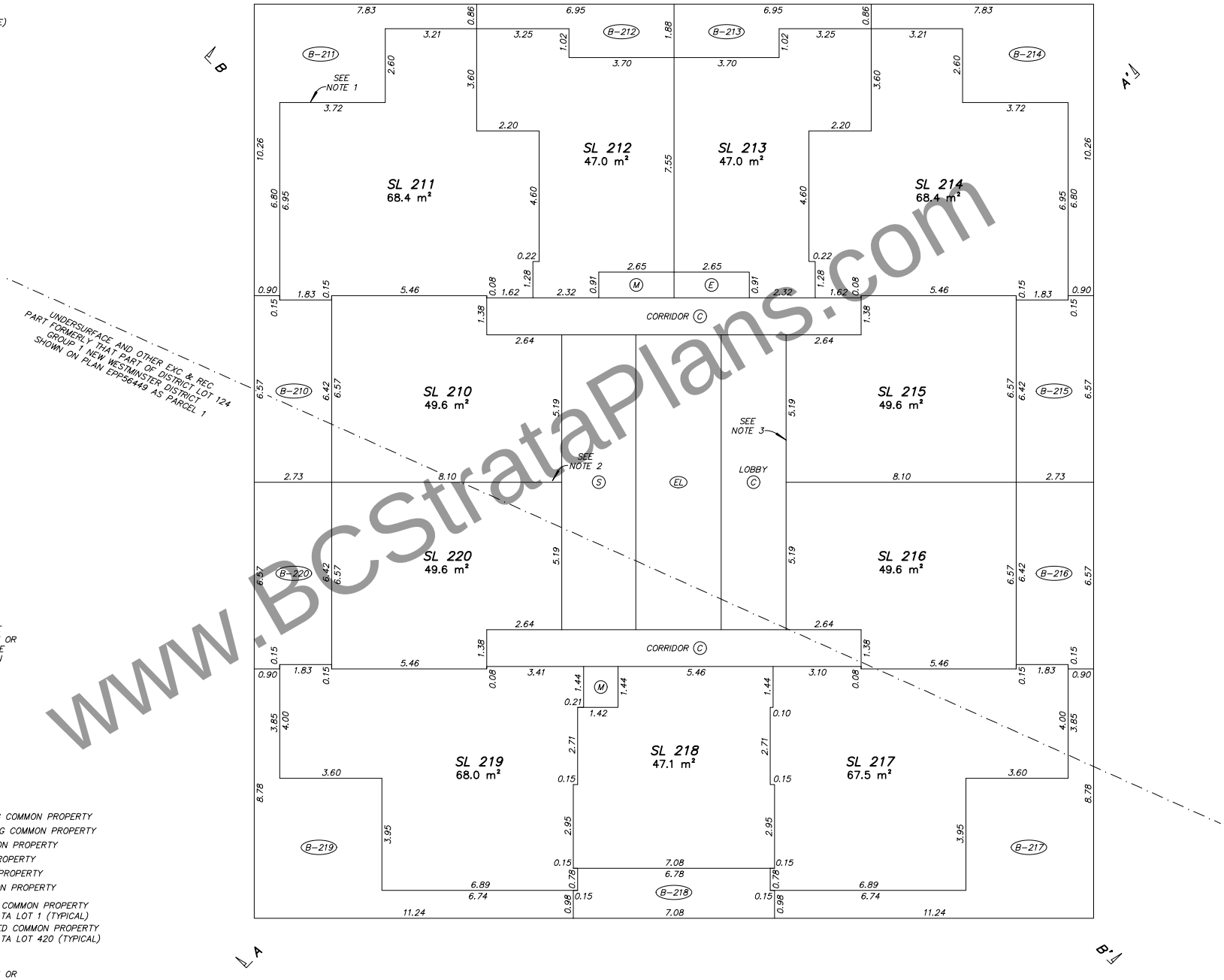

NOTES:

1. STRATA LOT BOUNDARY EXTERIOR FACE OF EXTERIOR WALLS (TYPICAL)
2. STRATA LOT BOUNDARY CENTRELINE OF DEMISING WALLS BETWEEN STRATA LOTS (TYPICAL)
3. STRATA LOT BOUNDARY EXTERIOR FACE OF WALLS ADJACENT TO COMMON AREAS (TYPICAL)
4. STRATA LOT BOUNDARY CENTRELINE FLOOR/CEILING (TYPICAL)
5. UPPER LIMIT OF LCP IS EXTENSION OF THE CENTRELINE OF THE FLOOR/CEILING ABOVE OR WHERE THERE IS NO FLOOR ABOVE, BY THE AVERAGE HEIGHT OF A STRATA LOT WITHIN THE SAME BUILDING (TYPICAL)

LEGEND

m²	DENOTES SQUARE METRES
SL	DENOTES STRATA LOT
PT	DENOTES PART
T	DENOTES TOTAL
Ex.	DENOTES EXPLANATORY
(C)	DENOTES COMMON PROPERTY
(E)	DENOTES ELECTRICAL ROOM BEING COMMON PROPERTY
(M)	DENOTES MECHANICAL ROOM BEING COMMON PROPERTY
(V)	DENOTES VESTIBULE BEING COMMON PROPERTY
(D)	DENOTES DUCT BEING COMMON PROPERTY
(S)	DENOTES STAIRS BEING COMMON PROPERTY
(EL)	DENOTES ELEVATOR BEING COMMON PROPERTY
(B-1)	DENOTES BALCONY BEING LIMITED COMMON PROPERTY FOR THE EXCLUSIVE USE OF STRATA LOT 1 (TYPICAL)
(RD-420)	DENOTES ROOF DECK BEING LIMITED COMMON PROPERTY FOR THE EXCLUSIVE USE OF STRATA LOT 420 (TYPICAL)

LCP AREAS ARE DEFINED AS TO HEIGHT BY THE CENTRE OF THE FLOOR ABOVE OR ITS EXTENSION OR WHERE THERE IS NO FLOOR ABOVE, BY THE AVERAGE HEIGHT OF A STRATA LOT WITHIN THE SAME BUILDING, UNLESS OTHERWISE NOTED

SECTION ARROWS POINT IN THE DIRECTION OF VIEW

www.BCStrataPlans.com

BUTLER SUNDVICK

JESSE MORIN, BCLS
Date: SEPTEMBER 16, 2022
File: 4772\Strata\Final
Dwg: 4772-FS

STRATA PLAN EPS8443

TOWER 1
LEVEL 23

0 5 10

SCALE 1 : 100 DISTANCES ARE IN METRES

THE INTENDED PLOT SCALE OF THIS PLAN IS 560 mm IN WIDTH BY 432 mm IN HEIGHT (C SIZE) WHEN PLOTTED AT A SCALE OF 1:100.

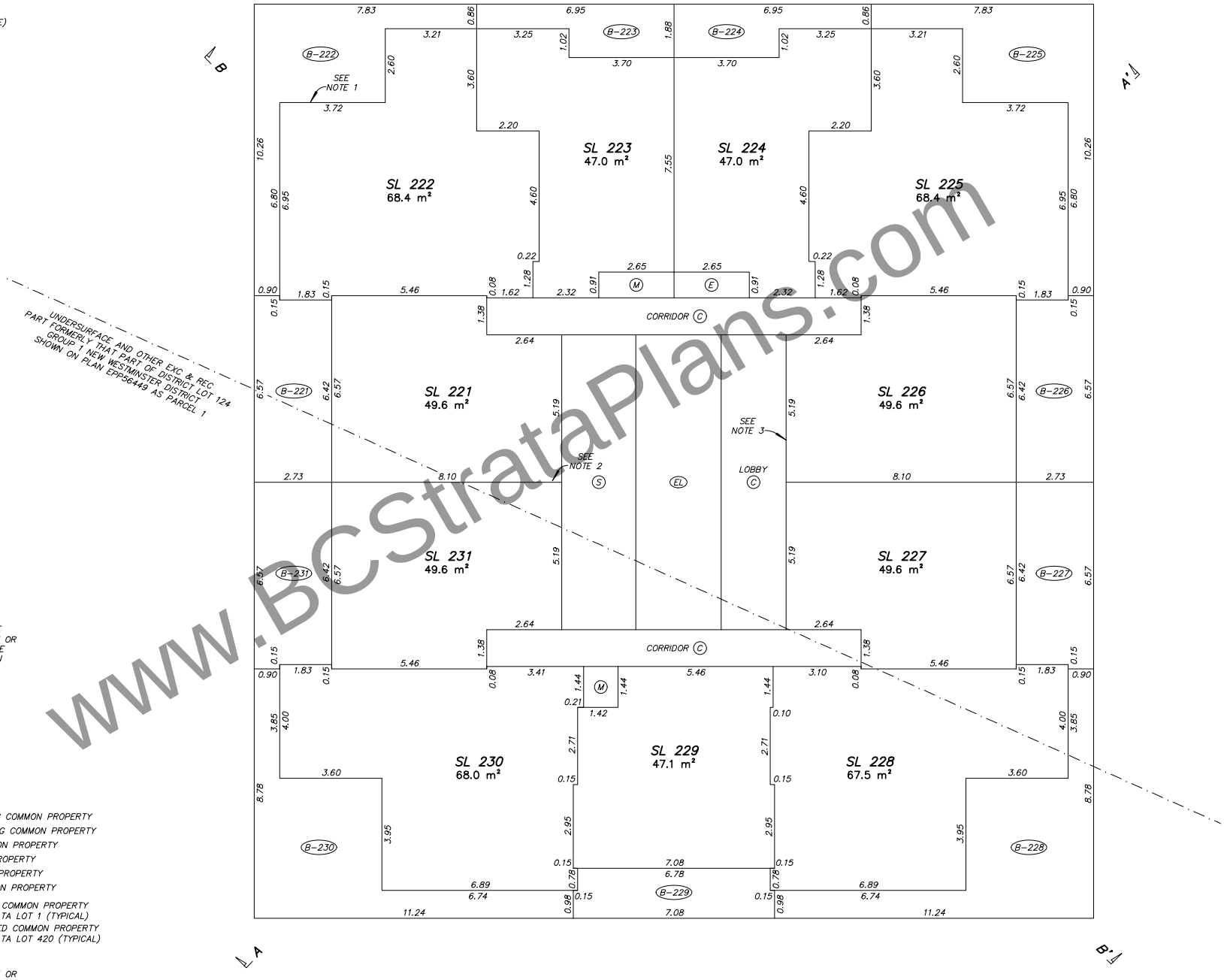

NOTES:

1. STRATA LOT BOUNDARY EXTERIOR FACE OF EXTERIOR WALLS (TYPICAL)
2. STRATA LOT BOUNDARY CENTRELINE OF DEMISING WALLS BETWEEN STRATA LOTS (TYPICAL)
3. STRATA LOT BOUNDARY EXTERIOR FACE OF WALLS ADJACENT TO COMMON AREAS (TYPICAL)
4. STRATA LOT BOUNDARY CENTRELINE FLOOR/CEILING (TYPICAL)
5. UPPER LIMIT OF LCP IS EXTENSION OF THE CENTRELINE OF THE FLOOR/CEILING ABOVE OR WHERE THERE IS NO FLOOR ABOVE, BY THE AVERAGE HEIGHT OF A STRATA LOT WITHIN THE SAME BUILDING (TYPICAL)

LEGEND

m²	DENOTES SQUARE METRES
SL	DENOTES STRATA LOT
PT	DENOTES PART
T	DENOTES TOTAL
Ex.	DENOTES EXPLANATORY
(C)	DENOTES COMMON PROPERTY
(E)	DENOTES ELECTRICAL ROOM BEING COMMON PROPERTY
(M)	DENOTES MECHANICAL ROOM BEING COMMON PROPERTY
(V)	DENOTES VESTIBULE BEING COMMON PROPERTY
(D)	DENOTES DUCT BEING COMMON PROPERTY
(S)	DENOTES STAIRS BEING COMMON PROPERTY
(EL)	DENOTES ELEVATOR BEING COMMON PROPERTY
(B-1)	DENOTES BALCONY BEING LIMITED COMMON PROPERTY FOR THE EXCLUSIVE USE OF STRATA LOT 1 (TYPICAL)
(RD-420)	DENOTES ROOF DECK BEING LIMITED COMMON PROPERTY FOR THE EXCLUSIVE USE OF STRATA LOT 420 (TYPICAL)

LCP AREAS ARE DEFINED AS TO HEIGHT BY THE CENTRE OF THE FLOOR ABOVE OR ITS EXTENSION OR WHERE THERE IS NO FLOOR ABOVE, BY THE AVERAGE HEIGHT OF A STRATA LOT WITHIN THE SAME BUILDING, UNLESS OTHERWISE NOTED

SECTION ARROWS POINT IN THE DIRECTION OF VIEW

www.BCStrataPlans.com

BUTLER SUNDVICK

JESSE MORIN, BCLS
Date: SEPTEMBER 16, 2022
File: 4772\Strata\Final
Dwg: 4772-FS

STRATA PLAN EPS8443

TOWER 1
LEVEL 24

0 5 10

SCALE 1 : 100 DISTANCES ARE IN METRES

THE INTENDED PLOT SCALE OF THIS PLAN IS 560 mm IN WIDTH BY 432 mm IN HEIGHT (C SIZE) WHEN PLOTTED AT A SCALE OF 1:100.

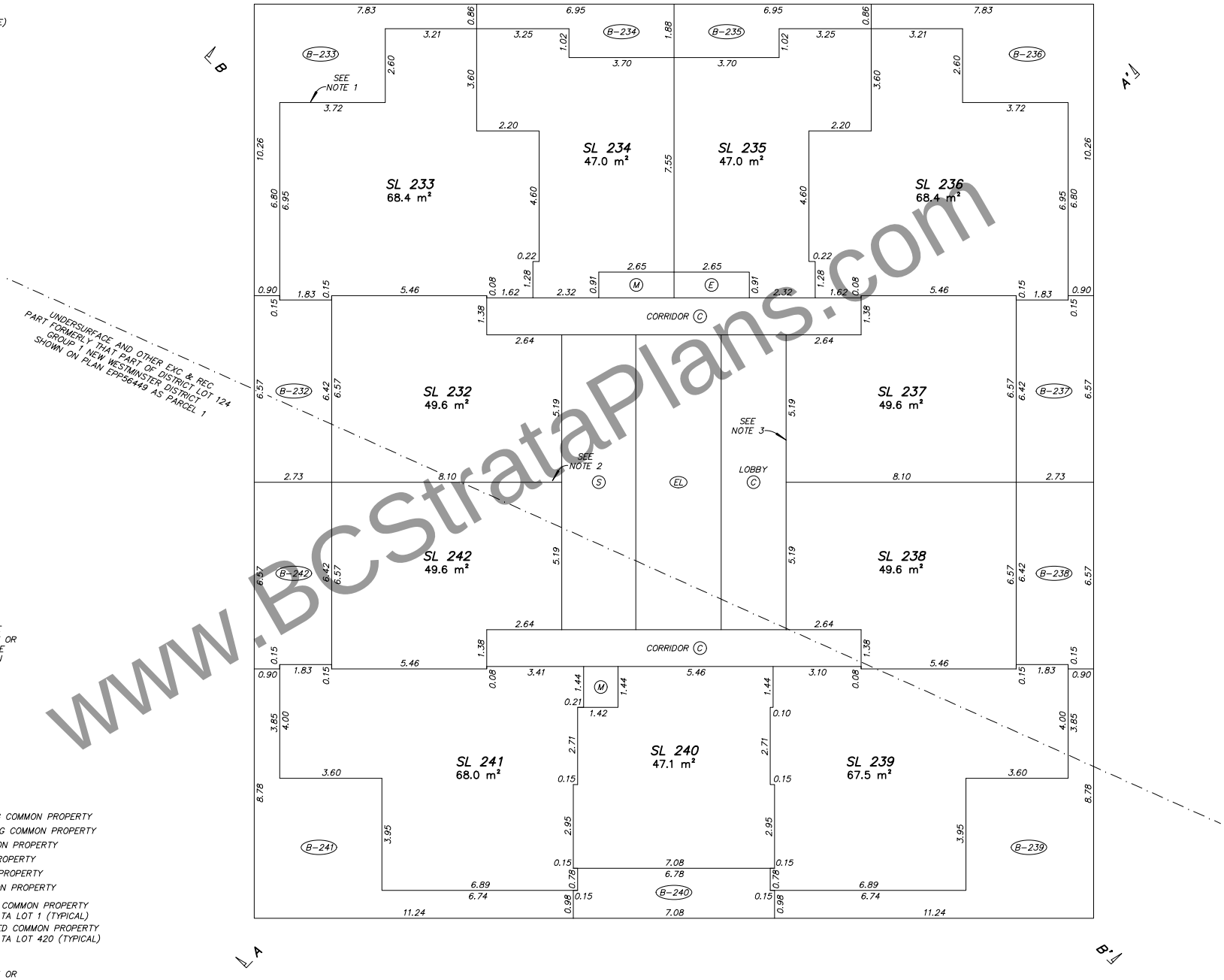

NOTES:

1. STRATA LOT BOUNDARY EXTERIOR FACE OF EXTERIOR WALLS (TYPICAL)
2. STRATA LOT BOUNDARY CENTRELINE OF DEMISING WALLS BETWEEN STRATA LOTS (TYPICAL)
3. STRATA LOT BOUNDARY EXTERIOR FACE OF WALLS ADJACENT TO COMMON AREAS (TYPICAL)
4. STRATA LOT BOUNDARY CENTRELINE FLOOR/CEILING (TYPICAL)
5. UPPER LIMIT OF LCP IS EXTENSION OF THE CENTRELINE OF THE FLOOR/CEILING ABOVE OR WHERE THERE IS NO FLOOR ABOVE, BY THE AVERAGE HEIGHT OF A STRATA LOT WITHIN THE SAME BUILDING (TYPICAL)

LEGEND

m²	DENOTES SQUARE METRES
SL	DENOTES STRATA LOT
PT	DENOTES PART
T	DENOTES TOTAL
Ex.	DENOTES EXPLANATORY
(C)	DENOTES COMMON PROPERTY
(E)	DENOTES ELECTRICAL ROOM BEING COMMON PROPERTY
(M)	DENOTES MECHANICAL ROOM BEING COMMON PROPERTY
(V)	DENOTES VESTIBULE BEING COMMON PROPERTY
(D)	DENOTES DUCT BEING COMMON PROPERTY
(S)	DENOTES STAIRS BEING COMMON PROPERTY
(EL)	DENOTES ELEVATOR BEING COMMON PROPERTY
(B-1)	DENOTES BALCONY BEING LIMITED COMMON PROPERTY FOR THE EXCLUSIVE USE OF STRATA LOT 1 (TYPICAL)
(RD-420)	DENOTES ROOF DECK BEING LIMITED COMMON PROPERTY FOR THE EXCLUSIVE USE OF STRATA LOT 420 (TYPICAL)

LCP AREAS ARE DEFINED AS TO HEIGHT BY THE CENTRE OF THE FLOOR ABOVE OR ITS EXTENSION OR WHERE THERE IS NO FLOOR ABOVE, BY THE AVERAGE HEIGHT OF A STRATA LOT WITHIN THE SAME BUILDING, UNLESS OTHERWISE NOTED

SECTION ARROWS POINT IN THE DIRECTION OF VIEW

www.BCStrataPlans.com

BUTLER SUNDVICK

JESSE MORIN, BCLS
Date: SEPTEMBER 16, 2022
File: 4772\Strata\Final
Dwg: 4772-FS

STRATA PLAN EPS8443

TOWER 1
LEVEL 25

0 5 10

SCALE 1 : 100 DISTANCES ARE IN METRES

THE INTENDED PLOT SCALE OF THIS PLAN IS 560 mm IN WIDTH BY 432 mm IN HEIGHT (C SIZE) WHEN PLOTTED AT A SCALE OF 1:100.

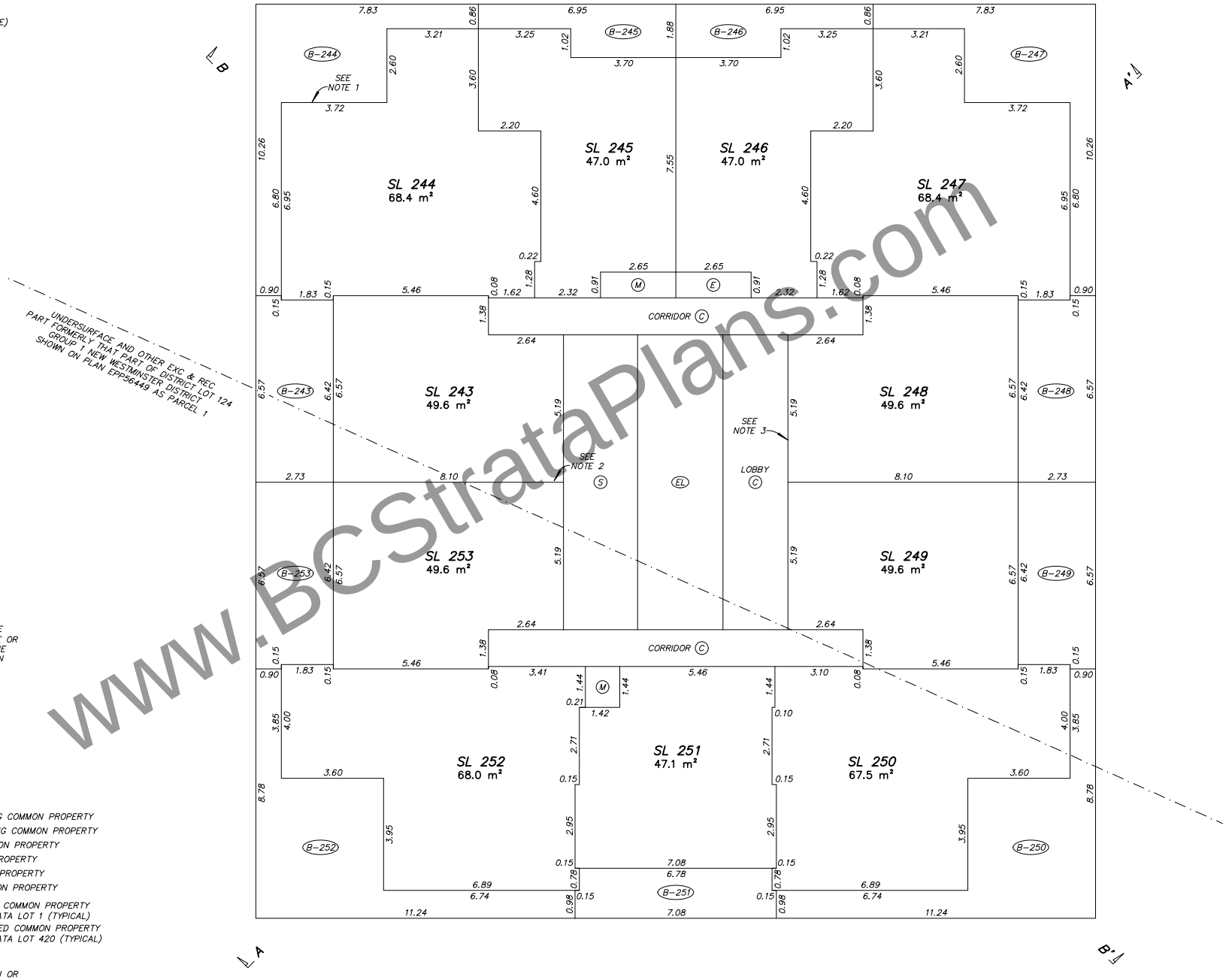

NOTES:

1. STRATA LOT BOUNDARY EXTERIOR FACE OF EXTERIOR WALLS (TYPICAL)
2. STRATA LOT BOUNDARY CENTRELINE OF DEMISING WALLS BETWEEN STRATA LOTS (TYPICAL)
3. STRATA LOT BOUNDARY EXTERIOR FACE OF WALLS ADJACENT TO COMMON AREAS (TYPICAL)
4. STRATA LOT BOUNDARY CENTRELINE FLOOR/CEILING (TYPICAL)
5. UPPER LIMIT OF LCP IS EXTENSION OF THE CENTRELINE OF THE FLOOR/CEILING ABOVE OR WHERE THERE IS NO FLOOR ABOVE, BY THE AVERAGE HEIGHT OF A STRATA LOT WITHIN THE SAME BUILDING (TYPICAL)

LEGEND

m²	DENOTES SQUARE METRES
SL	DENOTES STRATA LOT
PT	DENOTES PART
T	DENOTES TOTAL
Ex.	DENOTES EXPLANATORY
(C)	DENOTES COMMON PROPERTY
(E)	DENOTES ELECTRICAL ROOM BEING COMMON PROPERTY
(M)	DENOTES MECHANICAL ROOM BEING COMMON PROPERTY
(V)	DENOTES VESTIBULE BEING COMMON PROPERTY
(D)	DENOTES DUCT BEING COMMON PROPERTY
(S)	DENOTES STAIRS BEING COMMON PROPERTY
(EL)	DENOTES ELEVATOR BEING COMMON PROPERTY
(B-1)	DENOTES BALCONY BEING LIMITED COMMON PROPERTY FOR THE EXCLUSIVE USE OF STRATA LOT 1 (TYPICAL)
(RD-420)	DENOTES ROOF DECK BEING LIMITED COMMON PROPERTY FOR THE EXCLUSIVE USE OF STRATA LOT 420 (TYPICAL)

LCP AREAS ARE DEFINED AS TO HEIGHT BY THE CENTRE OF THE FLOOR ABOVE OR ITS EXTENSION OR WHERE THERE IS NO FLOOR ABOVE, BY THE AVERAGE HEIGHT OF A STRATA LOT WITHIN THE SAME BUILDING, UNLESS OTHERWISE NOTED

SECTION ARROWS POINT IN THE DIRECTION OF VIEW

www.BCStrataPlans.com

BUTLER SUNDVICK

JESSE MORIN, BCLS
Date: SEPTEMBER 16, 2022
File: 4772\Strata\Final
Dwg: 4772-FS

STRATA PLAN EPS8443

TOWER 1
LEVEL 26

0 5 10

SCALE 1 : 100 DISTANCES ARE IN METRES

THE INTENDED PLOT SCALE OF THIS PLAN IS 560 mm IN WIDTH BY 432 mm IN HEIGHT (C SIZE) WHEN PLOTTED AT A SCALE OF 1:100.

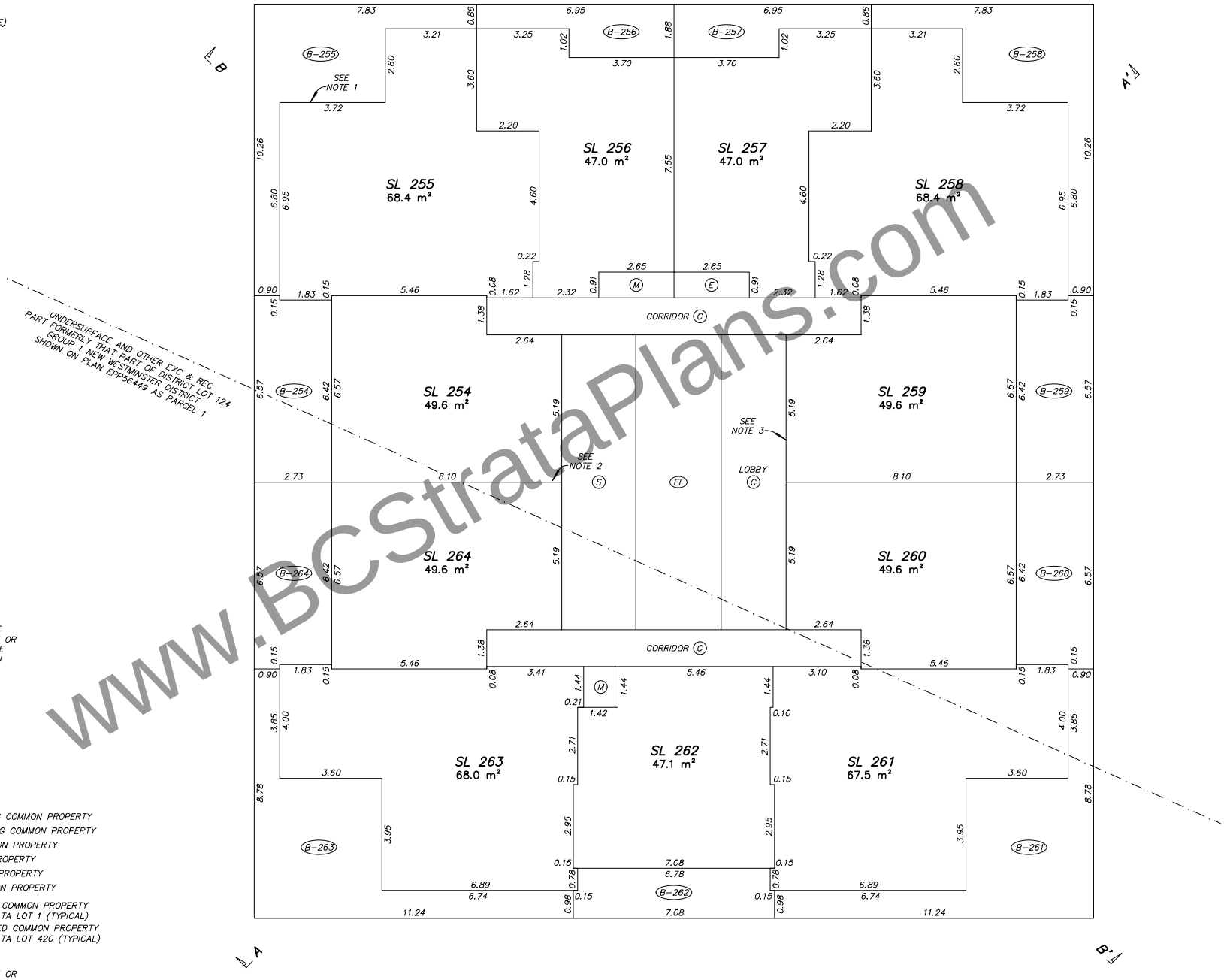

NOTES:

1. STRATA LOT BOUNDARY EXTERIOR FACE OF EXTERIOR WALLS (TYPICAL)
2. STRATA LOT BOUNDARY CENTRELINE OF DEMISING WALLS BETWEEN STRATA LOTS (TYPICAL)
3. STRATA LOT BOUNDARY EXTERIOR FACE OF WALLS ADJACENT TO COMMON AREAS (TYPICAL)
4. STRATA LOT BOUNDARY CENTRELINE FLOOR/CEILING (TYPICAL)
5. UPPER LIMIT OF LCP IS EXTENSION OF THE CENTRELINE OF THE FLOOR/CEILING ABOVE OR WHERE THERE IS NO FLOOR ABOVE, BY THE AVERAGE HEIGHT OF A STRATA LOT WITHIN THE SAME BUILDING (TYPICAL)

LEGEND

m²	DENOTES SQUARE METRES
SL	DENOTES STRATA LOT
PT	DENOTES PART
T	DENOTES TOTAL
Ex.	DENOTES EXPLANATORY
(C)	DENOTES COMMON PROPERTY
(E)	DENOTES ELECTRICAL ROOM BEING COMMON PROPERTY
(M)	DENOTES MECHANICAL ROOM BEING COMMON PROPERTY
(V)	DENOTES VESTIBULE BEING COMMON PROPERTY
(D)	DENOTES DUCT BEING COMMON PROPERTY
(S)	DENOTES STAIRS BEING COMMON PROPERTY
(EL)	DENOTES ELEVATOR BEING COMMON PROPERTY
(B-1)	DENOTES BALCONY BEING LIMITED COMMON PROPERTY FOR THE EXCLUSIVE USE OF STRATA LOT 1 (TYPICAL)
(RD-420)	DENOTES ROOF DECK BEING LIMITED COMMON PROPERTY FOR THE EXCLUSIVE USE OF STRATA LOT 420 (TYPICAL)

LCP AREAS ARE DEFINED AS TO HEIGHT BY THE CENTRE OF THE FLOOR ABOVE OR ITS EXTENSION OR WHERE THERE IS NO FLOOR ABOVE, BY THE AVERAGE HEIGHT OF A STRATA LOT WITHIN THE SAME BUILDING, UNLESS OTHERWISE NOTED

SECTION ARROWS POINT IN THE DIRECTION OF VIEW

www.BCStrataPlans.com

BUTLER SUNDVICK

JESSE MORIN, BCLS
Date: SEPTEMBER 16, 2022
File: 4772\Strata\Final
Dwg: 4772-FS

STRATA PLAN EPS8443

TOWER 1
LEVEL 27

0 5 10

SCALE 1 : 100 DISTANCES ARE IN METRES

THE INTENDED PLOT SCALE OF THIS PLAN IS 560 mm IN WIDTH BY 432 mm IN HEIGHT (C SIZE) WHEN PLOTTED AT A SCALE OF 1:100.

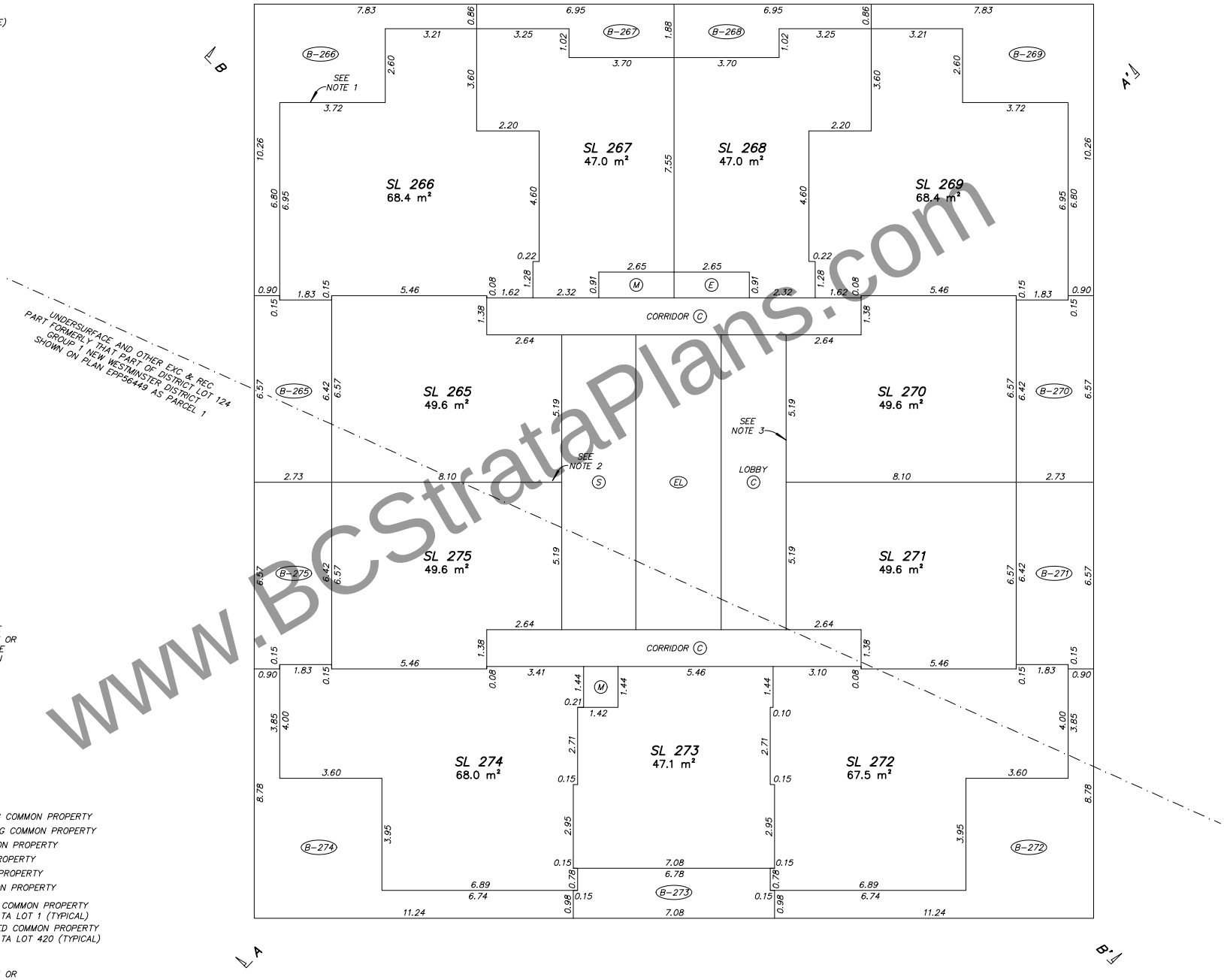

NOTES:

1. STRATA LOT BOUNDARY EXTERIOR FACE OF EXTERIOR WALLS (TYPICAL)
2. STRATA LOT BOUNDARY CENTRELINE OF DEMISING WALLS BETWEEN STRATA LOTS (TYPICAL)
3. STRATA LOT BOUNDARY EXTERIOR FACE OF WALLS ADJACENT TO COMMON AREAS (TYPICAL)
4. STRATA LOT BOUNDARY CENTRELINE FLOOR/CEILING (TYPICAL)
5. UPPER LIMIT OF LCP IS EXTENSION OF THE CENTRELINE OF THE FLOOR/CEILING ABOVE OR WHERE THERE IS NO FLOOR ABOVE, BY THE AVERAGE HEIGHT OF A STRATA LOT WITHIN THE SAME BUILDING (TYPICAL)

LEGEND

m²	DENOTES SQUARE METRES
SL	DENOTES STRATA LOT
PT	DENOTES PART
T	DENOTES TOTAL
Ex.	DENOTES EXPLANATORY
C	DENOTES COMMON PROPERTY
E	DENOTES ELECTRICAL ROOM BEING COMMON PROPERTY
M	DENOTES MECHANICAL ROOM BEING COMMON PROPERTY
V	DENOTES VESTIBULE BEING COMMON PROPERTY
D	DENOTES DUCT BEING COMMON PROPERTY
S	DENOTES STAIRS BEING COMMON PROPERTY
EL	DENOTES ELEVATOR BEING COMMON PROPERTY
B-1	DENOTES BALCONY BEING LIMITED COMMON PROPERTY FOR THE EXCLUSIVE USE OF STRATA LOT 1 (TYPICAL)
RD-420	DENOTES ROOF DECK BEING LIMITED COMMON PROPERTY FOR THE EXCLUSIVE USE OF STRATA LOT 420 (TYPICAL)

LCP AREAS ARE DEFINED AS TO HEIGHT BY THE CENTRE OF THE FLOOR ABOVE OR ITS EXTENSION OR WHERE THERE IS NO FLOOR ABOVE, BY THE AVERAGE HEIGHT OF A STRATA LOT WITHIN THE SAME BUILDING, UNLESS OTHERWISE NOTED

SECTION ARROWS POINT IN THE DIRECTION OF VIEW

www.BCStrataPlans.com

BUTLER SUNDVICK

JESSE MORIN, BCLS
Date: SEPTEMBER 16, 2022
File: 4772\Strata\Final
Dwg: 4772-FS

STRATA PLAN EPS8443

TOWER 1
LEVEL 28

0 5 10

SCALE 1 : 100 DISTANCES ARE IN METRES

THE INTENDED PLOT SCALE OF THIS PLAN IS 560 mm IN WIDTH BY 432 mm IN HEIGHT (C SIZE) WHEN PLOTTED AT A SCALE OF 1:100.

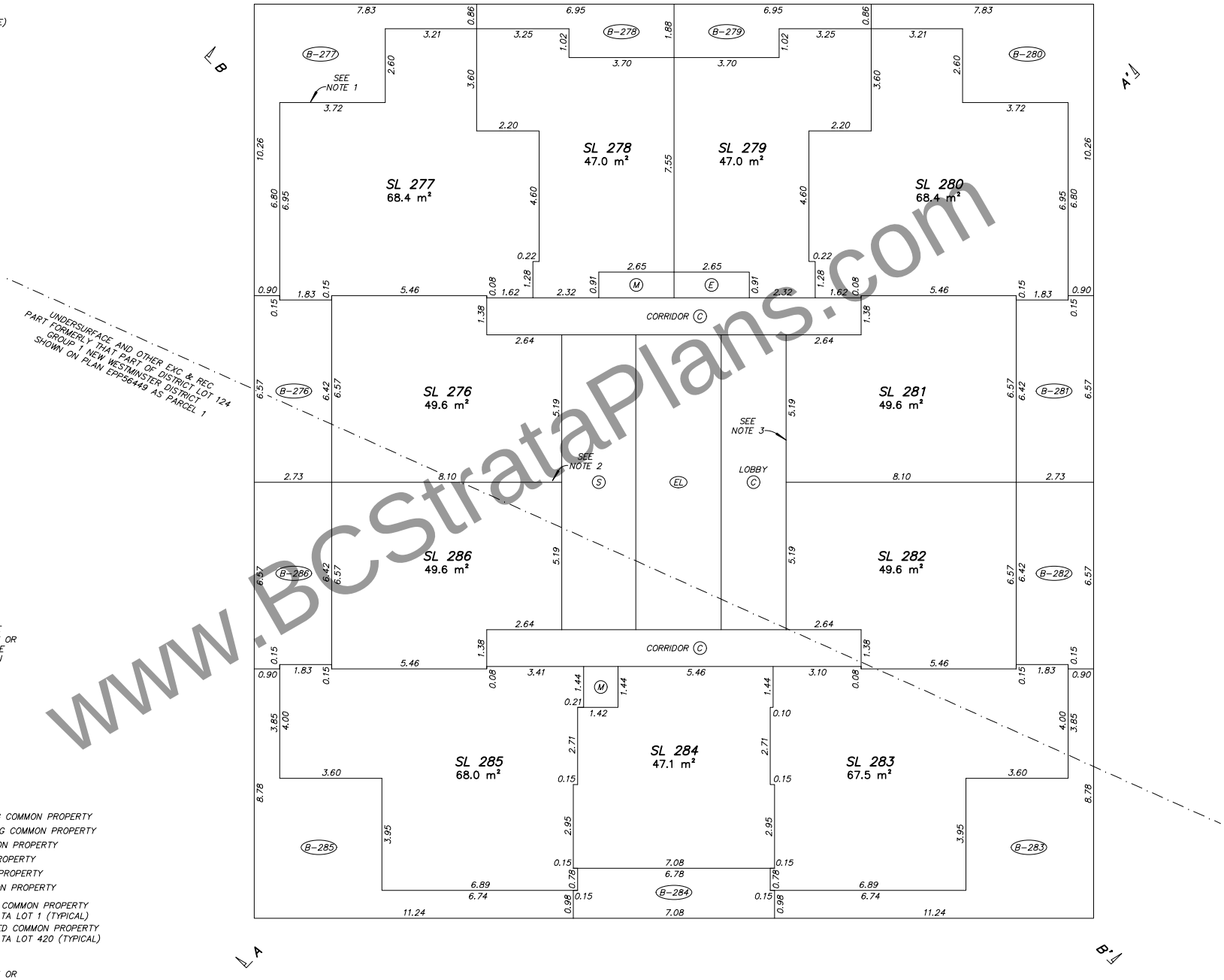

NOTES:

1. STRATA LOT BOUNDARY EXTERIOR FACE OF EXTERIOR WALLS (TYPICAL)
2. STRATA LOT BOUNDARY CENTRELINE OF DEMISING WALLS BETWEEN STRATA LOTS (TYPICAL)
3. STRATA LOT BOUNDARY EXTERIOR FACE OF WALLS ADJACENT TO COMMON AREAS (TYPICAL)
4. STRATA LOT BOUNDARY CENTRELINE FLOOR/CEILING (TYPICAL)
5. UPPER LIMIT OF LCP IS EXTENSION OF THE CENTRELINE OF THE FLOOR/CEILING ABOVE OR WHERE THERE IS NO FLOOR ABOVE, BY THE AVERAGE HEIGHT OF A STRATA LOT WITHIN THE SAME BUILDING (TYPICAL)

LEGEND

m²	DENOTES SQUARE METRES
SL	DENOTES STRATA LOT
PT	DENOTES PART
T	DENOTES TOTAL
Ex.	DENOTES EXPLANATORY
(C)	DENOTES COMMON PROPERTY
(E)	DENOTES ELECTRICAL ROOM BEING COMMON PROPERTY
(M)	DENOTES MECHANICAL ROOM BEING COMMON PROPERTY
(V)	DENOTES VESTIBULE BEING COMMON PROPERTY
(D)	DENOTES DUCT BEING COMMON PROPERTY
(S)	DENOTES STAIRS BEING COMMON PROPERTY
(EL)	DENOTES ELEVATOR BEING COMMON PROPERTY
(B-1)	DENOTES BALCONY BEING LIMITED COMMON PROPERTY FOR THE EXCLUSIVE USE OF STRATA LOT 1 (TYPICAL)
(RD-420)	DENOTES ROOF DECK BEING LIMITED COMMON PROPERTY FOR THE EXCLUSIVE USE OF STRATA LOT 420 (TYPICAL)

LCP AREAS ARE DEFINED AS TO HEIGHT BY THE CENTRE OF THE FLOOR ABOVE OR ITS EXTENSION OR WHERE THERE IS NO FLOOR ABOVE, BY THE AVERAGE HEIGHT OF A STRATA LOT WITHIN THE SAME BUILDING, UNLESS OTHERWISE NOTED

SECTION ARROWS POINT IN THE DIRECTION OF VIEW

www.BCStrataPlans.com

BUTLER SUNDVICK

JESSE MORIN, BCLS
Date: SEPTEMBER 16, 2022
File: 4772\Strata\Final
Dwg: 4772-FS

STRATA PLAN EPS8443

TOWER 1
LEVEL 29

0 5 10

SCALE 1 : 100 DISTANCES ARE IN METRES

THE INTENDED PLOT SCALE OF THIS PLAN IS 560 mm IN WIDTH BY 432 mm IN HEIGHT (C SIZE) WHEN PLOTTED AT A SCALE OF 1:100.

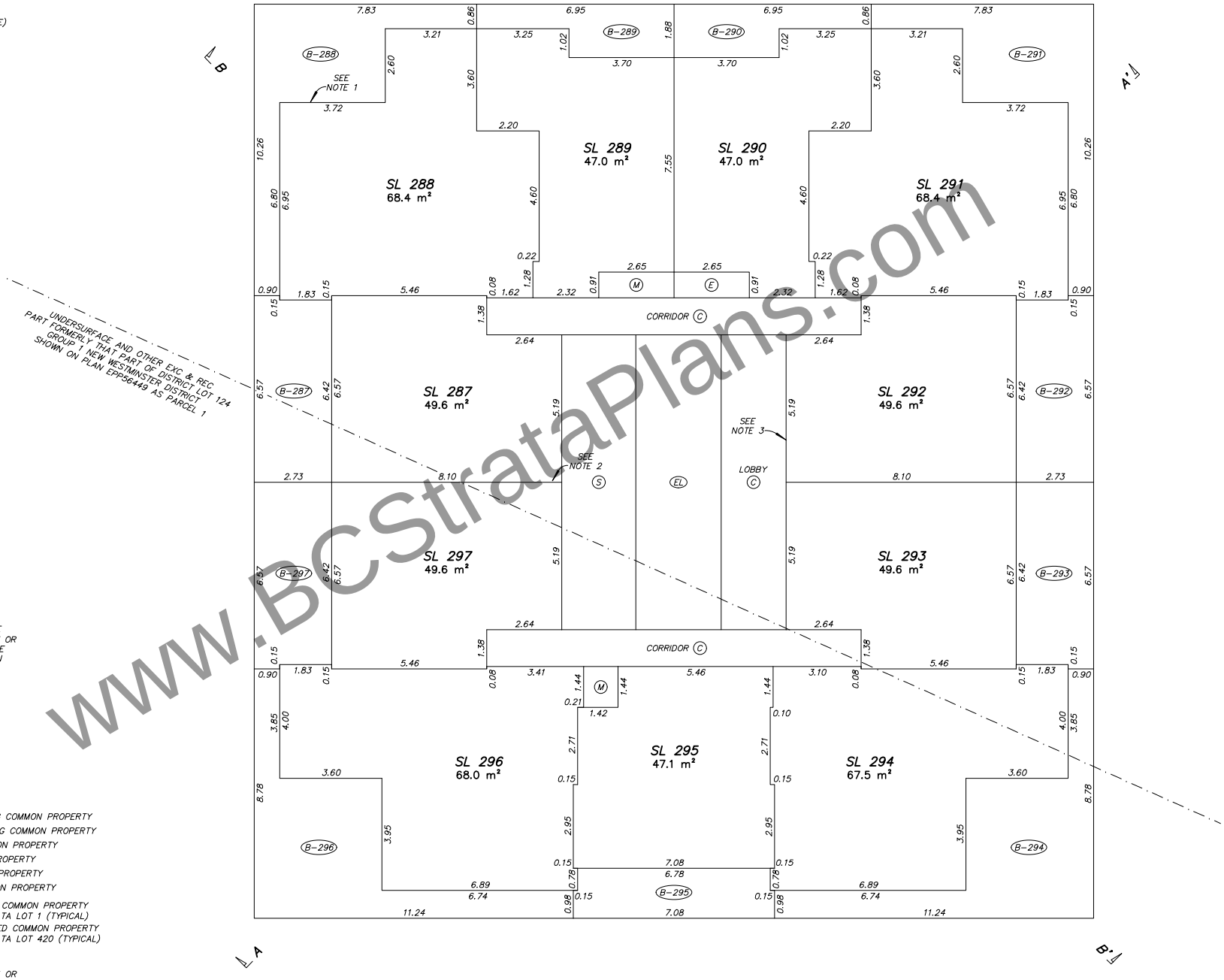

NOTES:

1. STRATA LOT BOUNDARY EXTERIOR FACE OF EXTERIOR WALLS (TYPICAL)
2. STRATA LOT BOUNDARY CENTRELINE OF DEMISING WALLS BETWEEN STRATA LOTS (TYPICAL)
3. STRATA LOT BOUNDARY EXTERIOR FACE OF WALLS ADJACENT TO COMMON AREAS (TYPICAL)
4. STRATA LOT BOUNDARY CENTRELINE FLOOR/CEILING (TYPICAL)
5. UPPER LIMIT OF LCP IS EXTENSION OF THE CENTRELINE OF THE FLOOR/CEILING ABOVE OR WHERE THERE IS NO FLOOR ABOVE, BY THE AVERAGE HEIGHT OF A STRATA LOT WITHIN THE SAME BUILDING (TYPICAL)

LEGEND

m²	DENOTES SQUARE METRES
SL	DENOTES STRATA LOT
PT	DENOTES PART
T	DENOTES TOTAL
Ex.	DENOTES EXPLANATORY
C	DENOTES COMMON PROPERTY
E	DENOTES ELECTRICAL ROOM BEING COMMON PROPERTY
M	DENOTES MECHANICAL ROOM BEING COMMON PROPERTY
V	DENOTES VESTIBULE BEING COMMON PROPERTY
D	DENOTES DUCT BEING COMMON PROPERTY
S	DENOTES STAIRS BEING COMMON PROPERTY
EL	DENOTES ELEVATOR BEING COMMON PROPERTY
B-1	DENOTES BALCONY BEING LIMITED COMMON PROPERTY FOR THE EXCLUSIVE USE OF STRATA LOT 1 (TYPICAL)
RD-420	DENOTES ROOF DECK BEING LIMITED COMMON PROPERTY FOR THE EXCLUSIVE USE OF STRATA LOT 420 (TYPICAL)

LCP AREAS ARE DEFINED AS TO HEIGHT BY THE CENTRE OF THE FLOOR ABOVE OR ITS EXTENSION OR WHERE THERE IS NO FLOOR ABOVE, BY THE AVERAGE HEIGHT OF A STRATA LOT WITHIN THE SAME BUILDING, UNLESS OTHERWISE NOTED

SECTION ARROWS POINT IN THE DIRECTION OF VIEW

www.BCStrataPlans.com

BUTLER SUNDVICK

JESSE MORIN, BCLS
Date: SEPTEMBER 16, 2022
File: 4772\Strata\Final
Dwg: 4772-FS

STRATA PLAN EPS8443

TOWER 1
LEVEL 30

0 5 10

SCALE 1 : 100 DISTANCES ARE IN METRES

THE INTENDED PLOT SCALE OF THIS PLAN IS 560 mm IN WIDTH BY 432 mm IN HEIGHT (C SIZE) WHEN PLOTTED AT A SCALE OF 1:100.

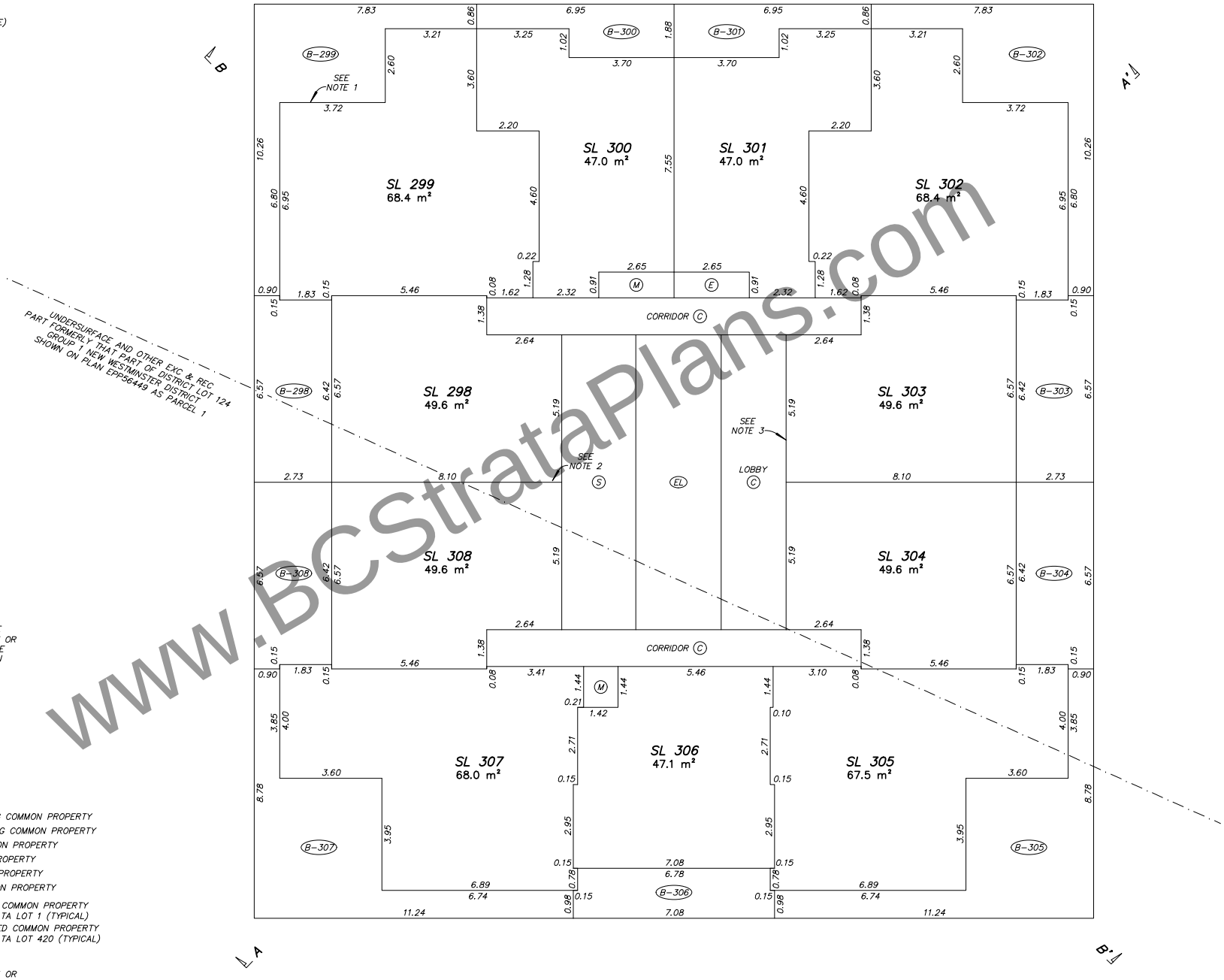

NOTES:

1. STRATA LOT BOUNDARY EXTERIOR FACE OF EXTERIOR WALLS (TYPICAL)
2. STRATA LOT BOUNDARY CENTRELINE OF DEMISING WALLS BETWEEN STRATA LOTS (TYPICAL)
3. STRATA LOT BOUNDARY EXTERIOR FACE OF WALLS ADJACENT TO COMMON AREAS (TYPICAL)
4. STRATA LOT BOUNDARY CENTRELINE FLOOR/CEILING (TYPICAL)
5. UPPER LIMIT OF LCP IS EXTENSION OF THE CENTRELINE OF THE FLOOR/CEILING ABOVE OR WHERE THERE IS NO FLOOR ABOVE, BY THE AVERAGE HEIGHT OF A STRATA LOT WITHIN THE SAME BUILDING (TYPICAL)

LEGEND

m²	DENOTES SQUARE METRES
SL	DENOTES STRATA LOT
PT	DENOTES PART
T	DENOTES TOTAL
Ex.	DENOTES EXPLANATORY
C	DENOTES COMMON PROPERTY
E	DENOTES ELECTRICAL ROOM BEING COMMON PROPERTY
M	DENOTES MECHANICAL ROOM BEING COMMON PROPERTY
V	DENOTES VESTIBULE BEING COMMON PROPERTY
D	DENOTES DUCT BEING COMMON PROPERTY
S	DENOTES STAIRS BEING COMMON PROPERTY
EL	DENOTES ELEVATOR BEING COMMON PROPERTY
B-1	DENOTES BALCONY BEING LIMITED COMMON PROPERTY FOR THE EXCLUSIVE USE OF STRATA LOT 1 (TYPICAL)
RD-420	DENOTES ROOF DECK BEING LIMITED COMMON PROPERTY FOR THE EXCLUSIVE USE OF STRATA LOT 420 (TYPICAL)

LCP AREAS ARE DEFINED AS TO HEIGHT BY THE CENTRE OF THE FLOOR ABOVE OR ITS EXTENSION OR WHERE THERE IS NO FLOOR ABOVE, BY THE AVERAGE HEIGHT OF A STRATA LOT WITHIN THE SAME BUILDING, UNLESS OTHERWISE NOTED

SECTION ARROWS POINT IN THE DIRECTION OF VIEW

www.BCStrataPlans.com

BUTLER SUNDVICK

JESSE MORIN, BCLS
Date: SEPTEMBER 16, 2022
File: 4772\Strata\Final
Dwg: 4772-FS

STRATA PLAN EPS8443

TOWER 1
LEVEL 31

0 5 10

SCALE 1 : 100 DISTANCES ARE IN METRES

THE INTENDED PLOT SCALE OF THIS PLAN IS 560 mm IN WIDTH BY 432 mm IN HEIGHT (C SIZE) WHEN PLOTTED AT A SCALE OF 1:100.

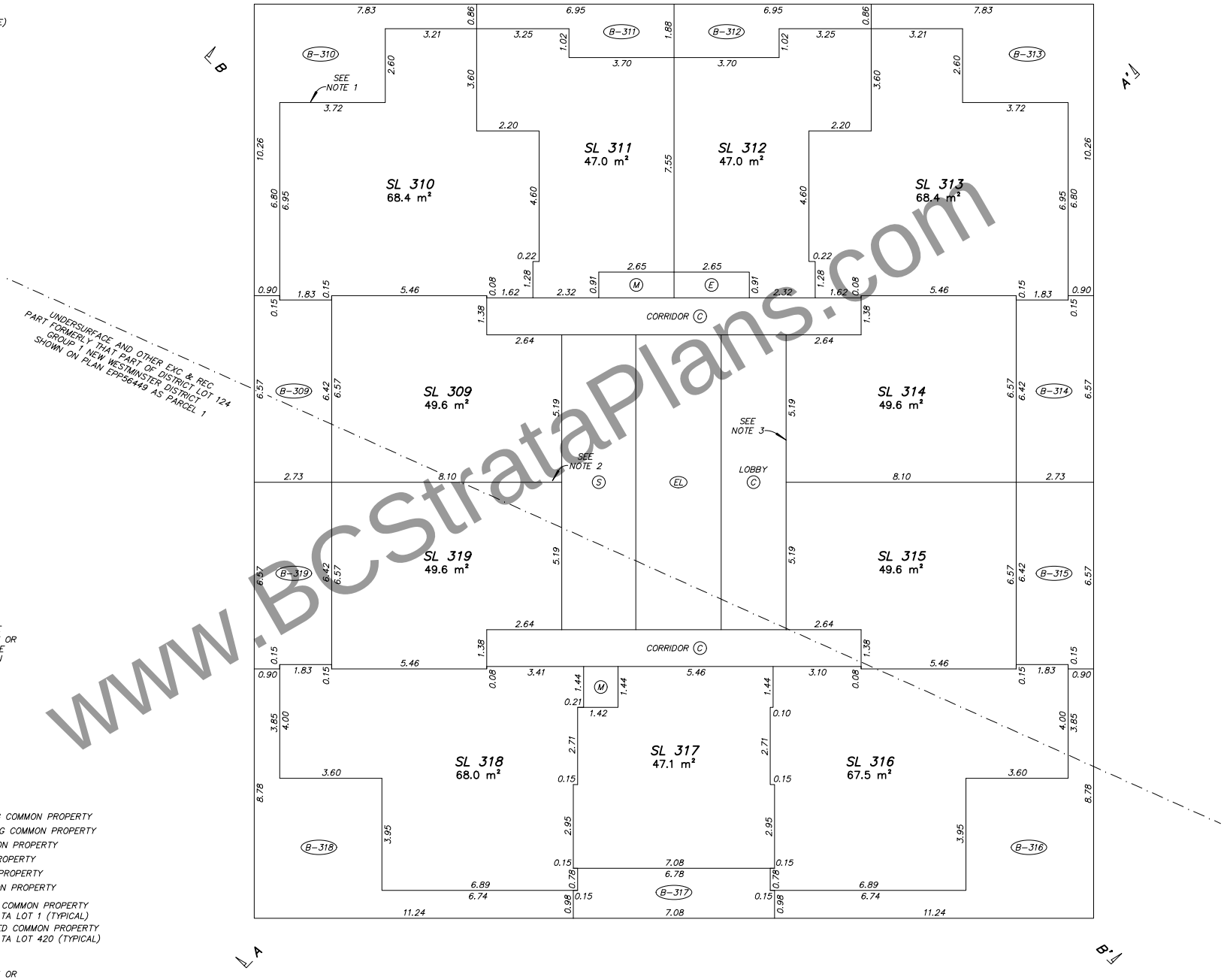

NOTES:

1. STRATA LOT BOUNDARY EXTERIOR FACE OF EXTERIOR WALLS (TYPICAL)
2. STRATA LOT BOUNDARY CENTRELINE OF DEMISING WALLS BETWEEN STRATA LOTS (TYPICAL)
3. STRATA LOT BOUNDARY EXTERIOR FACE OF WALLS ADJACENT TO COMMON AREAS (TYPICAL)
4. STRATA LOT BOUNDARY CENTRELINE FLOOR/CEILING (TYPICAL)
5. UPPER LIMIT OF LCP IS EXTENSION OF THE CENTRELINE OF THE FLOOR/CEILING ABOVE OR WHERE THERE IS NO FLOOR ABOVE, BY THE AVERAGE HEIGHT OF A STRATA LOT WITHIN THE SAME BUILDING (TYPICAL)

LEGEND

m²	DENOTES SQUARE METRES
SL	DENOTES STRATA LOT
PT	DENOTES PART
T	DENOTES TOTAL
Ex.	DENOTES EXPLANATORY
(C)	DENOTES COMMON PROPERTY
(E)	DENOTES ELECTRICAL ROOM BEING COMMON PROPERTY
(M)	DENOTES MECHANICAL ROOM BEING COMMON PROPERTY
(V)	DENOTES VESTIBULE BEING COMMON PROPERTY
(D)	DENOTES DUCT BEING COMMON PROPERTY
(S)	DENOTES STAIRS BEING COMMON PROPERTY
(EL)	DENOTES ELEVATOR BEING COMMON PROPERTY
(B-1)	DENOTES BALCONY BEING LIMITED COMMON PROPERTY FOR THE EXCLUSIVE USE OF STRATA LOT 1 (TYPICAL)
(RD-420)	DENOTES ROOF DECK BEING LIMITED COMMON PROPERTY FOR THE EXCLUSIVE USE OF STRATA LOT 420 (TYPICAL)

LCP AREAS ARE DEFINED AS TO HEIGHT BY THE CENTRE OF THE FLOOR ABOVE OR ITS EXTENSION OR WHERE THERE IS NO FLOOR ABOVE, BY THE AVERAGE HEIGHT OF A STRATA LOT WITHIN THE SAME BUILDING, UNLESS OTHERWISE NOTED

SECTION ARROWS POINT IN THE DIRECTION OF VIEW

BUTLER SUNDVICK

JESSE MORIN, BCLS
Date: SEPTEMBER 16, 2022
File: 4772\Strata\Final
Dwg: 4772-FS

www.BCStrataPlans.com

STRATA PLAN EPS8443

TOWER 1
LEVEL 32

0 5 10

SCALE 1 : 100 DISTANCES ARE IN METRES

THE INTENDED PLOT SCALE OF THIS PLAN IS 560 mm IN WIDTH BY 432 mm IN HEIGHT (C SIZE) WHEN PLOTTED AT A SCALE OF 1:100.

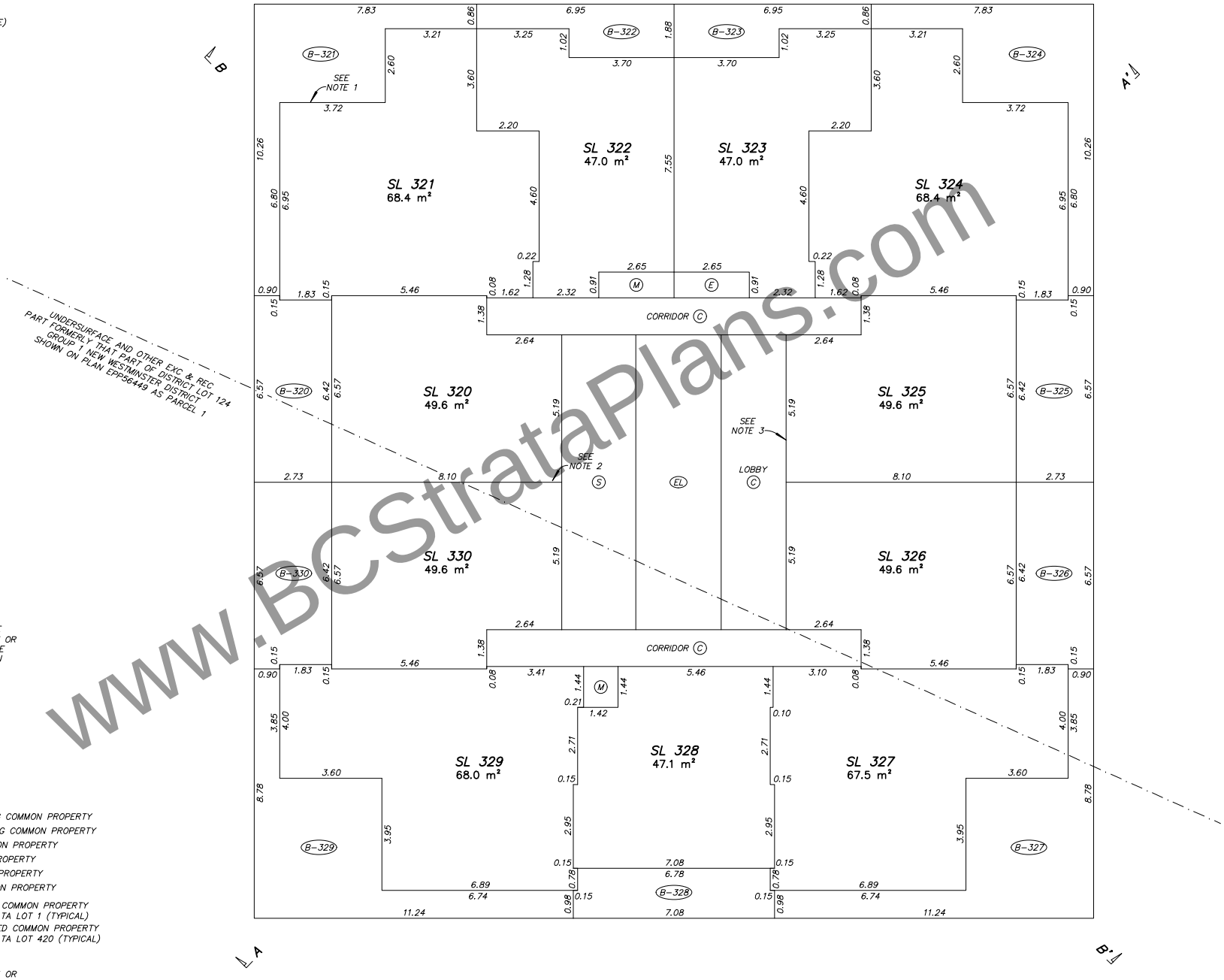

NOTES:

1. STRATA LOT BOUNDARY EXTERIOR FACE OF EXTERIOR WALLS (TYPICAL)
2. STRATA LOT BOUNDARY CENTRELINE OF DEMISING WALLS BETWEEN STRATA LOTS (TYPICAL)
3. STRATA LOT BOUNDARY EXTERIOR FACE OF WALLS ADJACENT TO COMMON AREAS (TYPICAL)
4. STRATA LOT BOUNDARY CENTRELINE FLOOR/CEILING (TYPICAL)
5. UPPER LIMIT OF LCP IS EXTENSION OF THE CENTRELINE OF THE FLOOR/CEILING ABOVE OR WHERE THERE IS NO FLOOR ABOVE, BY THE AVERAGE HEIGHT OF A STRATA LOT WITHIN THE SAME BUILDING (TYPICAL)

LEGEND

m²	DENOTES SQUARE METRES
SL	DENOTES STRATA LOT
PT	DENOTES PART
T	DENOTES TOTAL
Ex.	DENOTES EXPLANATORY
C	DENOTES COMMON PROPERTY
E	DENOTES ELECTRICAL ROOM BEING COMMON PROPERTY
M	DENOTES MECHANICAL ROOM BEING COMMON PROPERTY
V	DENOTES VESTIBULE BEING COMMON PROPERTY
D	DENOTES DUCT BEING COMMON PROPERTY
S	DENOTES STAIRS BEING COMMON PROPERTY
EL	DENOTES ELEVATOR BEING COMMON PROPERTY
B-1	DENOTES BALCONY BEING LIMITED COMMON PROPERTY FOR THE EXCLUSIVE USE OF STRATA LOT 1 (TYPICAL)
RD-420	DENOTES ROOF DECK BEING LIMITED COMMON PROPERTY FOR THE EXCLUSIVE USE OF STRATA LOT 420 (TYPICAL)

LCP AREAS ARE DEFINED AS TO HEIGHT BY THE CENTRE OF THE FLOOR ABOVE OR ITS EXTENSION OR WHERE THERE IS NO FLOOR ABOVE, BY THE AVERAGE HEIGHT OF A STRATA LOT WITHIN THE SAME BUILDING, UNLESS OTHERWISE NOTED

SECTION ARROWS POINT IN THE DIRECTION OF VIEW

www.BCStrataPlans.com

BUTLER SUNDVICK

JESSE MORIN, BCLS
Date: SEPTEMBER 16, 2022
File: 4772\Strata\Final
Dwg: 4772-FS

STRATA PLAN EPS8443

TOWER 1
LEVEL 33

0 5 10

SCALE 1 : 100 DISTANCES ARE IN METRES

THE INTENDED PLOT SCALE OF THIS PLAN IS 560 mm IN WIDTH BY 432 mm IN HEIGHT (C SIZE) WHEN PLOTTED AT A SCALE OF 1:100.

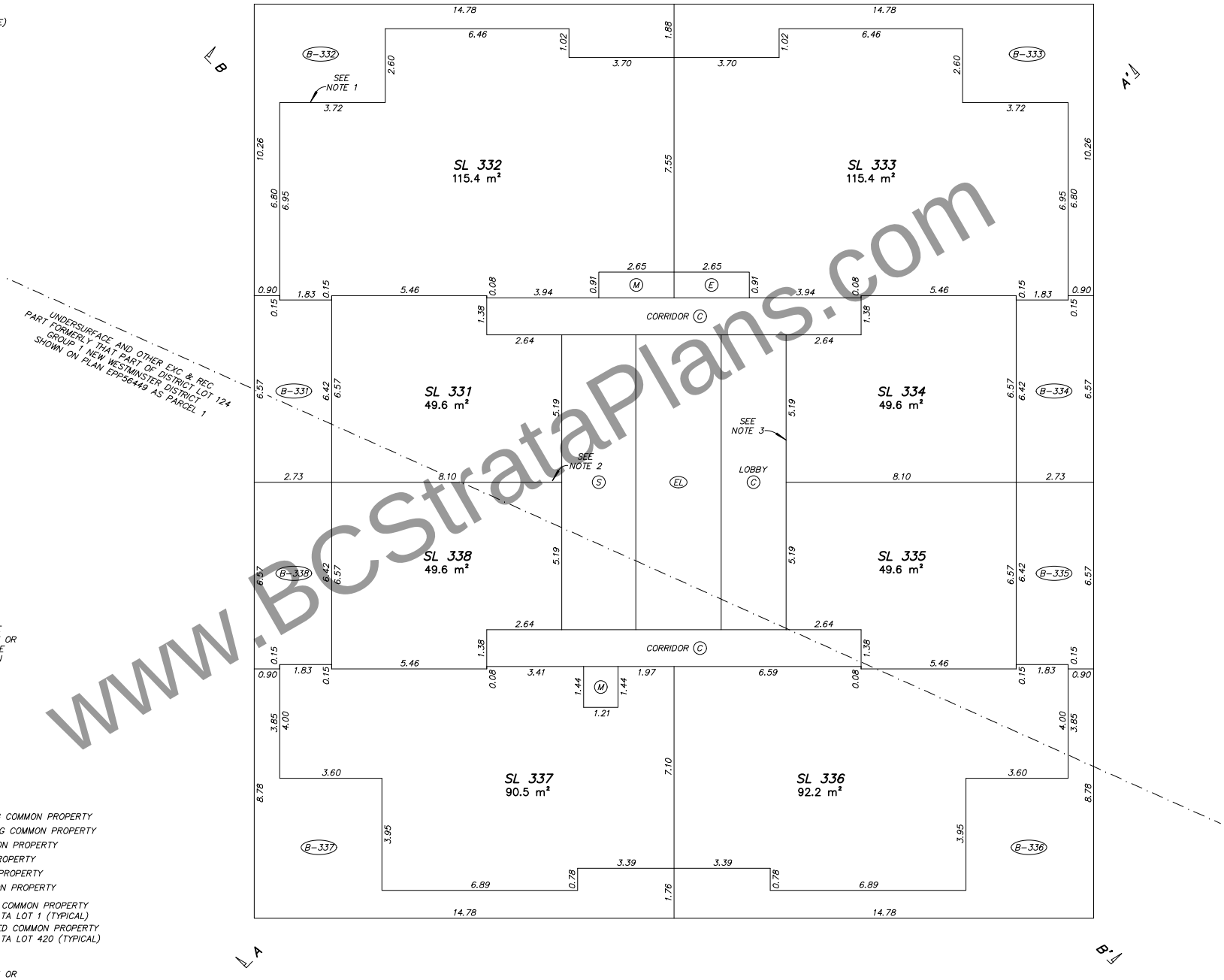

NOTES:

1. STRATA LOT BOUNDARY EXTERIOR FACE OF EXTERIOR WALLS (TYPICAL)
2. STRATA LOT BOUNDARY CENTRELINE OF DEMISING WALLS BETWEEN STRATA LOTS (TYPICAL)
3. STRATA LOT BOUNDARY EXTERIOR FACE OF WALLS ADJACENT TO COMMON AREAS (TYPICAL)
4. STRATA LOT BOUNDARY CENTRELINE FLOOR/CEILING (TYPICAL)
5. UPPER LIMIT OF LCP IS EXTENSION OF THE CENTRELINE OF THE FLOOR/CEILING ABOVE OR WHERE THERE IS NO FLOOR ABOVE, BY THE AVERAGE HEIGHT OF A STRATA LOT WITHIN THE SAME BUILDING (TYPICAL)

LEGEND

m²	DENOTES SQUARE METRES
SL	DENOTES STRATA LOT
PT	DENOTES PART
T	DENOTES TOTAL
Ex.	DENOTES EXPLANATORY
(C)	DENOTES COMMON PROPERTY
(E)	DENOTES ELECTRICAL ROOM BEING COMMON PROPERTY
(M)	DENOTES MECHANICAL ROOM BEING COMMON PROPERTY
(V)	DENOTES VESTIBULE BEING COMMON PROPERTY
(D)	DENOTES DUCT BEING COMMON PROPERTY
(S)	DENOTES STAIRS BEING COMMON PROPERTY
(EL)	DENOTES ELEVATOR BEING COMMON PROPERTY
(B-1)	DENOTES BALCONY BEING LIMITED COMMON PROPERTY FOR THE EXCLUSIVE USE OF STRATA LOT 1 (TYPICAL)
(RD-420)	DENOTES ROOF DECK BEING LIMITED COMMON PROPERTY FOR THE EXCLUSIVE USE OF STRATA LOT 420 (TYPICAL)

LCP AREAS ARE DEFINED AS TO HEIGHT BY THE CENTRE OF THE FLOOR ABOVE OR ITS EXTENSION OR WHERE THERE IS NO FLOOR ABOVE, BY THE AVERAGE HEIGHT OF A STRATA LOT WITHIN THE SAME BUILDING, UNLESS OTHERWISE NOTED

SECTION ARROWS POINT IN THE DIRECTION OF VIEW

www.BCStrataPlans.com

BUTLER SUNDVICK

JESSE MORIN, BCLS
Date: SEPTEMBER 16, 2022
File: 4772\Strata\Final
Dwg: 4772-FS

STRATA PLAN EPS8443

TOWER 1
LEVEL 34

0 5 10

SCALE 1 : 100 DISTANCES ARE IN METRES

THE INTENDED PLOT SCALE OF THIS PLAN IS 560 mm IN WIDTH BY 432 mm IN HEIGHT (C SIZE) WHEN PLOTTED AT A SCALE OF 1:100.

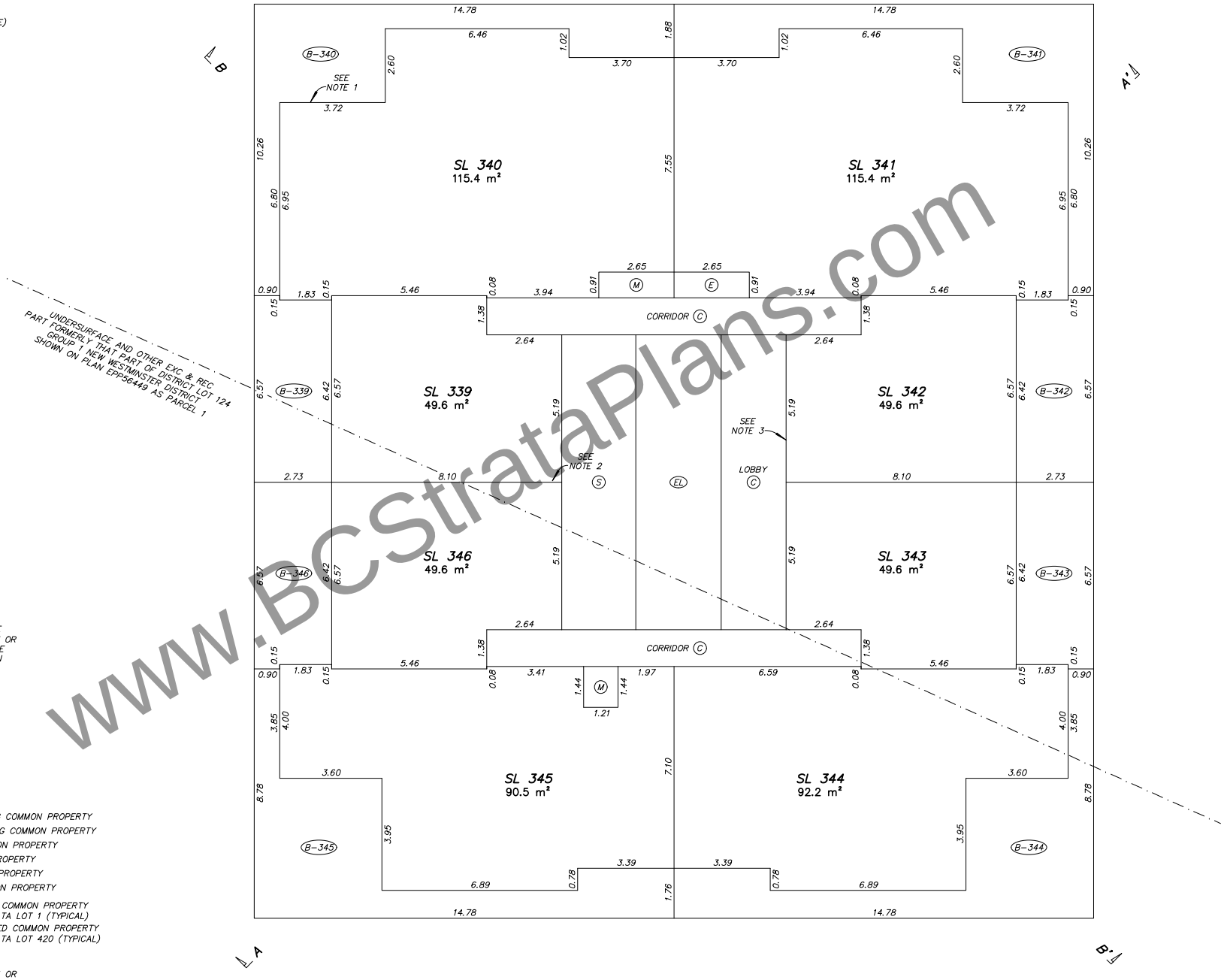

NOTES:

1. STRATA LOT BOUNDARY EXTERIOR FACE OF EXTERIOR WALLS (TYPICAL)
2. STRATA LOT BOUNDARY CENTRELINE OF DEMISING WALLS BETWEEN STRATA LOTS (TYPICAL)
3. STRATA LOT BOUNDARY EXTERIOR FACE OF WALLS ADJACENT TO COMMON AREAS (TYPICAL)
4. STRATA LOT BOUNDARY CENTRELINE FLOOR/CEILING (TYPICAL)
5. UPPER LIMIT OF LCP IS EXTENSION OF THE CENTRELINE OF THE FLOOR/CEILING ABOVE OR WHERE THERE IS NO FLOOR ABOVE, BY THE AVERAGE HEIGHT OF A STRATA LOT WITHIN THE SAME BUILDING (TYPICAL)

LEGEND

m²	DENOTES SQUARE METRES
SL	DENOTES STRATA LOT
PT	DENOTES PART
T	DENOTES TOTAL
Ex.	DENOTES EXPLANATORY
(C)	DENOTES COMMON PROPERTY
(E)	DENOTES ELECTRICAL ROOM BEING COMMON PROPERTY
(M)	DENOTES MECHANICAL ROOM BEING COMMON PROPERTY
(V)	DENOTES VESTIBULE BEING COMMON PROPERTY
(D)	DENOTES DUCT BEING COMMON PROPERTY
(S)	DENOTES STAIRS BEING COMMON PROPERTY
(EL)	DENOTES ELEVATOR BEING COMMON PROPERTY
(B-1)	DENOTES BALCONY BEING LIMITED COMMON PROPERTY FOR THE EXCLUSIVE USE OF STRATA LOT 1 (TYPICAL)
(RD-420)	DENOTES ROOF DECK BEING LIMITED COMMON PROPERTY FOR THE EXCLUSIVE USE OF STRATA LOT 420 (TYPICAL)

LCP AREAS ARE DEFINED AS TO HEIGHT BY THE CENTRE OF THE FLOOR ABOVE OR ITS EXTENSION OR WHERE THERE IS NO FLOOR ABOVE, BY THE AVERAGE HEIGHT OF A STRATA LOT WITHIN THE SAME BUILDING, UNLESS OTHERWISE NOTED

SECTION ARROWS POINT IN THE DIRECTION OF VIEW

www.BCStrataPlans.com

BUTLER SUNDVICK

JESSE MORIN, BCLS
Date: SEPTEMBER 16, 2022
File: 4772\Strata\Final
Dwg: 4772-FS

STRATA PLAN EPS8443

TOWER 1
LEVEL 35

0 5 10

SCALE 1 : 100 DISTANCES ARE IN METRES

THE INTENDED PLOT SCALE OF THIS PLAN IS 560 mm IN WIDTH BY 432 mm IN HEIGHT (C SIZE) WHEN PLOTTED AT A SCALE OF 1:100.

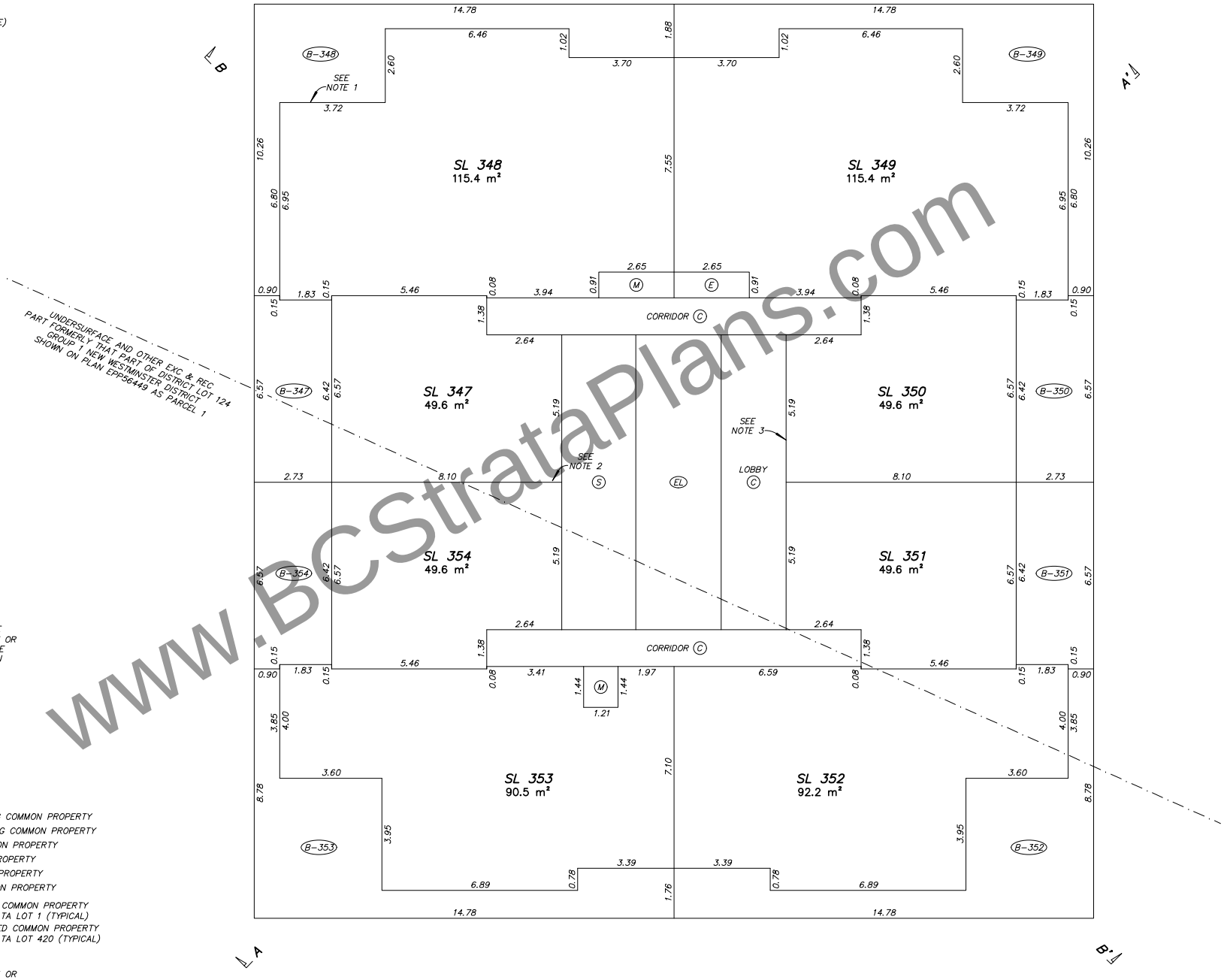

NOTES:

1. STRATA LOT BOUNDARY EXTERIOR FACE OF EXTERIOR WALLS (TYPICAL)
2. STRATA LOT BOUNDARY CENTRELINE OF DEMISING WALLS BETWEEN STRATA LOTS (TYPICAL)
3. STRATA LOT BOUNDARY EXTERIOR FACE OF WALLS ADJACENT TO COMMON AREAS (TYPICAL)
4. STRATA LOT BOUNDARY CENTRELINE FLOOR/CEILING (TYPICAL)
5. UPPER LIMIT OF LCP IS EXTENSION OF THE CENTRELINE OF THE FLOOR/CEILING ABOVE OR WHERE THERE IS NO FLOOR ABOVE, BY THE AVERAGE HEIGHT OF A STRATA LOT WITHIN THE SAME BUILDING (TYPICAL)

LEGEND

m²	DENOTES SQUARE METRES
SL	DENOTES STRATA LOT
PT	DENOTES PART
T	DENOTES TOTAL
Ex.	DENOTES EXPLANATORY
(C)	DENOTES COMMON PROPERTY
(E)	DENOTES ELECTRICAL ROOM BEING COMMON PROPERTY
(M)	DENOTES MECHANICAL ROOM BEING COMMON PROPERTY
(V)	DENOTES VESTIBULE BEING COMMON PROPERTY
(D)	DENOTES DUCT BEING COMMON PROPERTY
(S)	DENOTES STAIRS BEING COMMON PROPERTY
(EL)	DENOTES ELEVATOR BEING COMMON PROPERTY
(B-1)	DENOTES BALCONY BEING LIMITED COMMON PROPERTY FOR THE EXCLUSIVE USE OF STRATA LOT 1 (TYPICAL)
(RD-420)	DENOTES ROOF DECK BEING LIMITED COMMON PROPERTY FOR THE EXCLUSIVE USE OF STRATA LOT 420 (TYPICAL)

LCP AREAS ARE DEFINED AS TO HEIGHT BY THE CENTRE OF THE FLOOR ABOVE OR ITS EXTENSION OR WHERE THERE IS NO FLOOR ABOVE, BY THE AVERAGE HEIGHT OF A STRATA LOT WITHIN THE SAME BUILDING, UNLESS OTHERWISE NOTED

SECTION ARROWS POINT IN THE DIRECTION OF VIEW

www.BCStrataPlans.com

BUTLER SUNDVICK

JESSE MORIN, BCLS
Date: SEPTEMBER 16, 2022
File: 4772\Strata\Final
Dwg: 4772-FS

STRATA PLAN EPS8443

TOWER 1
LEVEL 36

0 5 10

SCALE 1 : 100 DISTANCES ARE IN METRES

THE INTENDED PLOT SCALE OF THIS PLAN IS 560 mm IN WIDTH BY 432 mm IN HEIGHT (C SIZE) WHEN PLOTTED AT A SCALE OF 1:100.

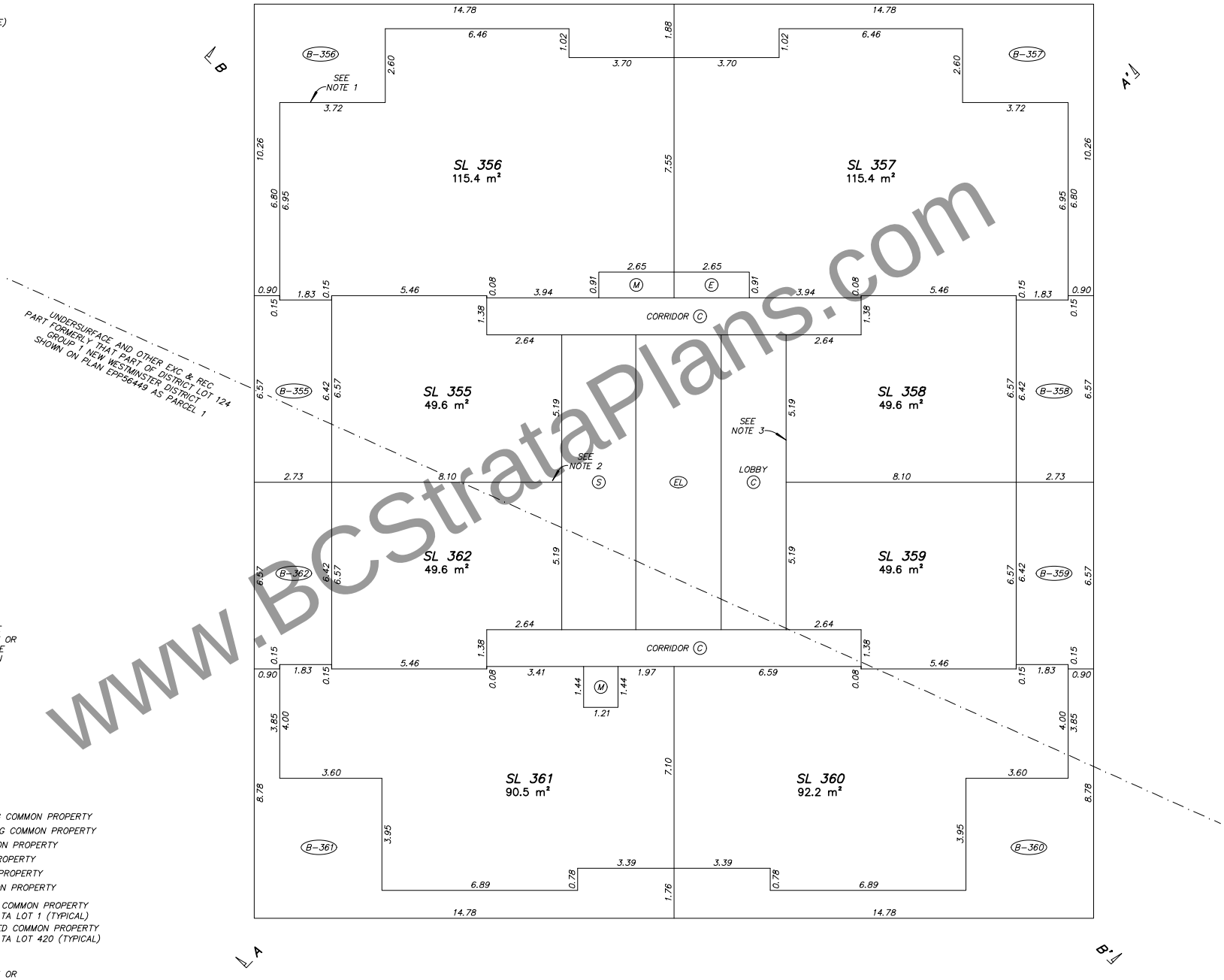

NOTES:

1. STRATA LOT BOUNDARY EXTERIOR FACE OF EXTERIOR WALLS (TYPICAL)
2. STRATA LOT BOUNDARY CENTRELINE OF DEMISING WALLS BETWEEN STRATA LOTS (TYPICAL)
3. STRATA LOT BOUNDARY EXTERIOR FACE OF WALLS ADJACENT TO COMMON AREAS (TYPICAL)
4. STRATA LOT BOUNDARY CENTRELINE FLOOR/CEILING (TYPICAL)
5. UPPER LIMIT OF LCP IS EXTENSION OF THE CENTRELINE OF THE FLOOR/CEILING ABOVE OR WHERE THERE IS NO FLOOR ABOVE, BY THE AVERAGE HEIGHT OF A STRATA LOT WITHIN THE SAME BUILDING (TYPICAL)

LEGEND

m²	DENOTES SQUARE METRES
SL	DENOTES STRATA LOT
PT	DENOTES PART
T	DENOTES TOTAL
Ex.	DENOTES EXPLANATORY
(C)	DENOTES COMMON PROPERTY
(E)	DENOTES ELECTRICAL ROOM BEING COMMON PROPERTY
(M)	DENOTES MECHANICAL ROOM BEING COMMON PROPERTY
(V)	DENOTES VESTIBULE BEING COMMON PROPERTY
(D)	DENOTES DUCT BEING COMMON PROPERTY
(S)	DENOTES STAIRS BEING COMMON PROPERTY
(EL)	DENOTES ELEVATOR BEING COMMON PROPERTY
(B-1)	DENOTES BALCONY BEING LIMITED COMMON PROPERTY FOR THE EXCLUSIVE USE OF STRATA LOT 1 (TYPICAL)
(RD-420)	DENOTES ROOF DECK BEING LIMITED COMMON PROPERTY FOR THE EXCLUSIVE USE OF STRATA LOT 420 (TYPICAL)

LCP AREAS ARE DEFINED AS TO HEIGHT BY THE CENTRE OF THE FLOOR ABOVE OR ITS EXTENSION OR WHERE THERE IS NO FLOOR ABOVE, BY THE AVERAGE HEIGHT OF A STRATA LOT WITHIN THE SAME BUILDING, UNLESS OTHERWISE NOTED

SECTION ARROWS POINT IN THE DIRECTION OF VIEW

www.BCStrataPlans.com

BUTLER SUNDVICK

JESSE MORIN, BCLS
Date: SEPTEMBER 16, 2022
File: 4772\Strata\Final
Dwg: 4772-FS

STRATA PLAN EPS8443

TOWER 1
LEVEL 37

0 5 10

SCALE 1 : 100 DISTANCES ARE IN METRES

THE INTENDED PLOT SCALE OF THIS PLAN IS 560 mm IN WIDTH BY 432 mm IN HEIGHT (C SIZE) WHEN PLOTTED AT A SCALE OF 1:100.

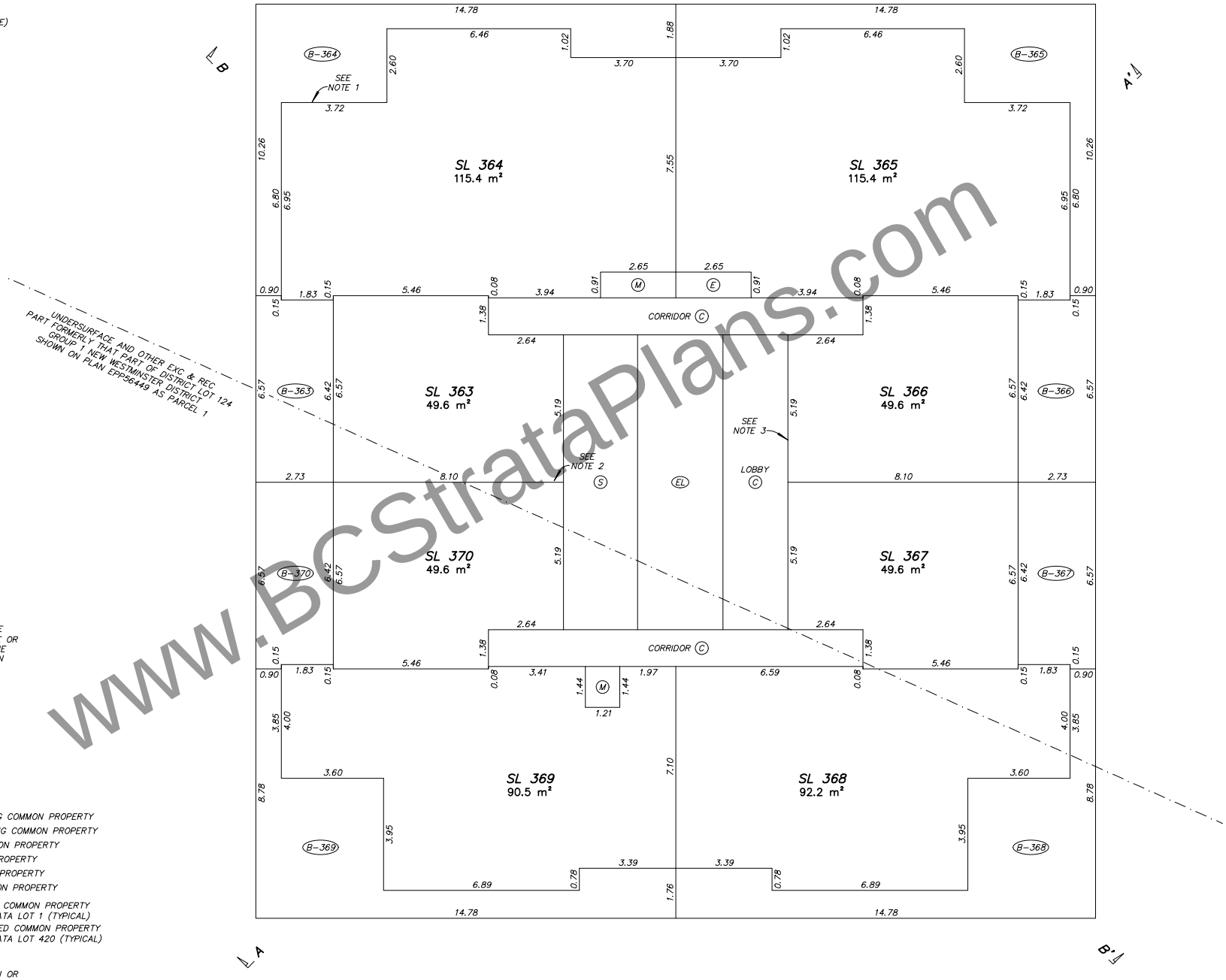

NOTES:

1. STRATA LOT BOUNDARY EXTERIOR FACE OF EXTERIOR WALLS (TYPICAL)
2. STRATA LOT BOUNDARY CENTRELINE OF DEMISING WALLS BETWEEN STRATA LOTS (TYPICAL)
3. STRATA LOT BOUNDARY EXTERIOR FACE OF WALLS ADJACENT TO COMMON AREAS (TYPICAL)
4. STRATA LOT BOUNDARY CENTRELINE FLOOR/CEILING (TYPICAL)
5. UPPER LIMIT OF LCP IS EXTENSION OF THE CENTRELINE OF THE FLOOR/CEILING ABOVE OR WHERE THERE IS NO FLOOR ABOVE, BY THE AVERAGE HEIGHT OF A STRATA LOT WITHIN THE SAME BUILDING (TYPICAL)

LEGEND

m²	DENOTES SQUARE METRES
SL	DENOTES STRATA LOT
PT	DENOTES PART
T	DENOTES TOTAL
Ex.	DENOTES EXPLANATORY
(C)	DENOTES COMMON PROPERTY
(E)	DENOTES ELECTRICAL ROOM BEING COMMON PROPERTY
(M)	DENOTES MECHANICAL ROOM BEING COMMON PROPERTY
(V)	DENOTES VESTIBULE BEING COMMON PROPERTY
(D)	DENOTES DUCT BEING COMMON PROPERTY
(S)	DENOTES STAIRS BEING COMMON PROPERTY
(EL)	DENOTES ELEVATOR BEING COMMON PROPERTY
(B-1)	DENOTES BALCONY BEING LIMITED COMMON PROPERTY FOR THE EXCLUSIVE USE OF STRATA LOT 1 (TYPICAL)
(RD-420)	DENOTES ROOF DECK BEING LIMITED COMMON PROPERTY FOR THE EXCLUSIVE USE OF STRATA LOT 420 (TYPICAL)

LCP AREAS ARE DEFINED AS TO HEIGHT BY THE CENTRE OF THE FLOOR ABOVE OR ITS EXTENSION OR WHERE THERE IS NO FLOOR ABOVE, BY THE AVERAGE HEIGHT OF A STRATA LOT WITHIN THE SAME BUILDING, UNLESS OTHERWISE NOTED

SECTION ARROWS POINT IN THE DIRECTION OF VIEW

BUTLER SUNDVICK

JESSE MORIN, BCLS
Date: SEPTEMBER 16, 2022
File: 4772\Strata\Final
Dwg: 4772-FS

www.BCStrataPlans.com

STRATA PLAN EPS8443

TOWER 1
LEVEL 38

0 5 10

SCALE 1 : 100 DISTANCES ARE IN METRES

THE INTENDED PLOT SCALE OF THIS PLAN IS 560 mm IN WIDTH BY 432 mm IN HEIGHT (C SIZE) WHEN PLOTTED AT A SCALE OF 1:100.

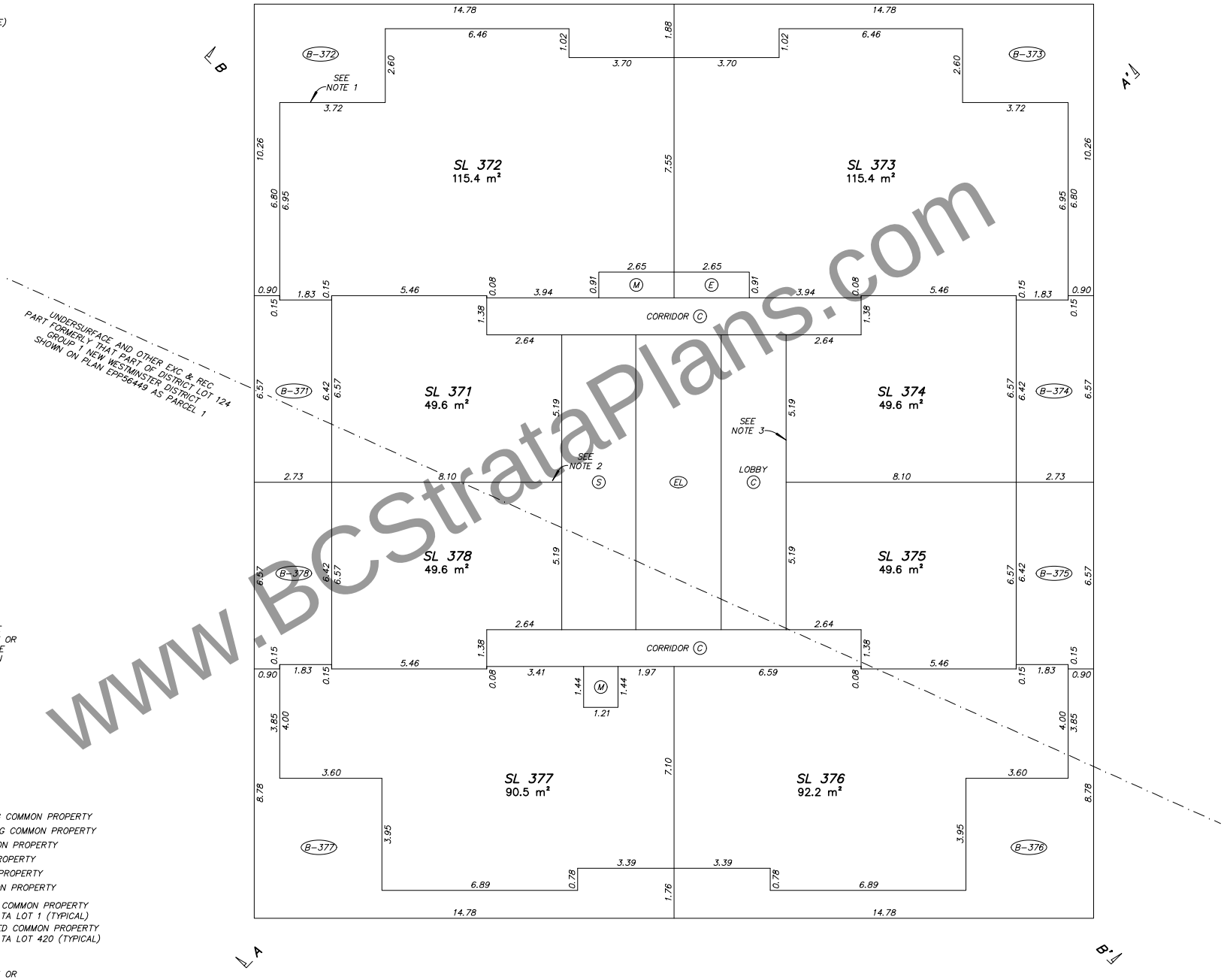

NOTES:

1. STRATA LOT BOUNDARY EXTERIOR FACE OF EXTERIOR WALLS (TYPICAL)
2. STRATA LOT BOUNDARY CENTRELINE OF DEMISING WALLS BETWEEN STRATA LOTS (TYPICAL)
3. STRATA LOT BOUNDARY EXTERIOR FACE OF WALLS ADJACENT TO COMMON AREAS (TYPICAL)
4. STRATA LOT BOUNDARY CENTRELINE FLOOR/CEILING (TYPICAL)
5. UPPER LIMIT OF LCP IS EXTENSION OF THE CENTRELINE OF THE FLOOR/CEILING ABOVE OR WHERE THERE IS NO FLOOR ABOVE, BY THE AVERAGE HEIGHT OF A STRATA LOT WITHIN THE SAME BUILDING (TYPICAL)

LEGEND

m²	DENOTES SQUARE METRES
SL	DENOTES STRATA LOT
PT	DENOTES PART
T	DENOTES TOTAL
Ex.	DENOTES EXPLANATORY
(C)	DENOTES COMMON PROPERTY
(E)	DENOTES ELECTRICAL ROOM BEING COMMON PROPERTY
(M)	DENOTES MECHANICAL ROOM BEING COMMON PROPERTY
(V)	DENOTES VESTIBULE BEING COMMON PROPERTY
(D)	DENOTES DUCT BEING COMMON PROPERTY
(S)	DENOTES STAIRS BEING COMMON PROPERTY
(EL)	DENOTES ELEVATOR BEING COMMON PROPERTY
(B-1)	DENOTES BALCONY BEING LIMITED COMMON PROPERTY FOR THE EXCLUSIVE USE OF STRATA LOT 1 (TYPICAL)
(RD-420)	DENOTES ROOF DECK BEING LIMITED COMMON PROPERTY FOR THE EXCLUSIVE USE OF STRATA LOT 420 (TYPICAL)

LCP AREAS ARE DEFINED AS TO HEIGHT BY THE CENTRE OF THE FLOOR ABOVE OR ITS EXTENSION OR WHERE THERE IS NO FLOOR ABOVE, BY THE AVERAGE HEIGHT OF A STRATA LOT WITHIN THE SAME BUILDING, UNLESS OTHERWISE NOTED

SECTION ARROWS POINT IN THE DIRECTION OF VIEW

www.BCStrataPlans.com

BUTLER SUNDVICK

JESSE MORIN, BCLS
Date: SEPTEMBER 16, 2022
File: 4772\Strata\Final
Dwg: 4772-FS

STRATA PLAN EPS8443

TOWER 1
LEVEL 39

0 5 10

SCALE 1 : 100 DISTANCES ARE IN METRES

THE INTENDED PLOT SCALE OF THIS PLAN IS 560 mm IN WIDTH BY 432 mm IN HEIGHT (C SIZE) WHEN PLOTTED AT A SCALE OF 1:100.

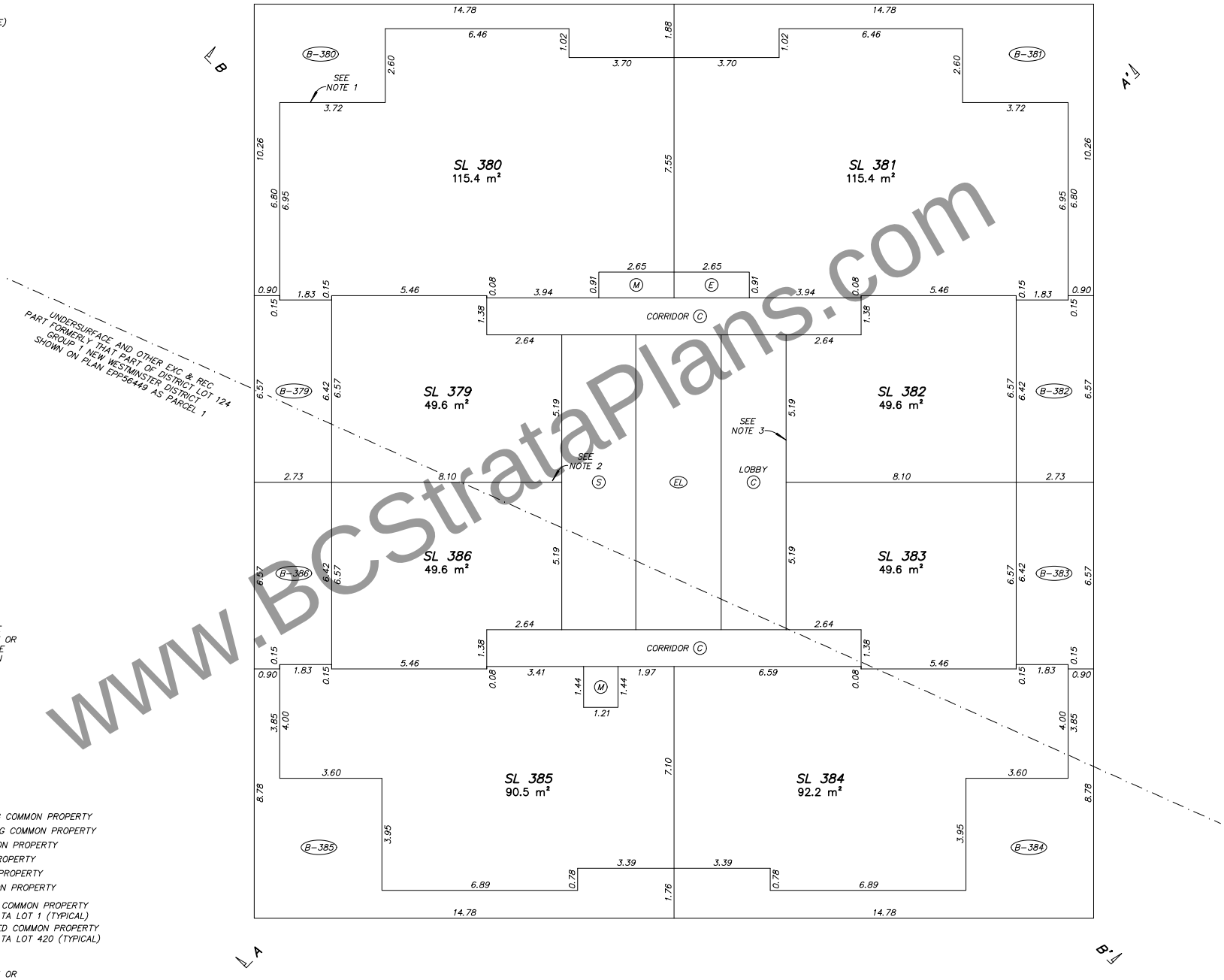

NOTES:

1. STRATA LOT BOUNDARY EXTERIOR FACE OF EXTERIOR WALLS (TYPICAL)
2. STRATA LOT BOUNDARY CENTRELINE OF DEMISING WALLS BETWEEN STRATA LOTS (TYPICAL)
3. STRATA LOT BOUNDARY EXTERIOR FACE OF WALLS ADJACENT TO COMMON AREAS (TYPICAL)
4. STRATA LOT BOUNDARY CENTRELINE FLOOR/CEILING (TYPICAL)
5. UPPER LIMIT OF LCP IS EXTENSION OF THE CENTRELINE OF THE FLOOR/CEILING ABOVE OR WHERE THERE IS NO FLOOR ABOVE, BY THE AVERAGE HEIGHT OF A STRATA LOT WITHIN THE SAME BUILDING (TYPICAL)

LEGEND

m²	DENOTES SQUARE METRES
SL	DENOTES STRATA LOT
PT	DENOTES PART
T	DENOTES TOTAL
Ex.	DENOTES EXPLANATORY
(C)	DENOTES COMMON PROPERTY
(E)	DENOTES ELECTRICAL ROOM BEING COMMON PROPERTY
(M)	DENOTES MECHANICAL ROOM BEING COMMON PROPERTY
(V)	DENOTES VESTIBULE BEING COMMON PROPERTY
(D)	DENOTES DUCT BEING COMMON PROPERTY
(S)	DENOTES STAIRS BEING COMMON PROPERTY
(EL)	DENOTES ELEVATOR BEING COMMON PROPERTY
(B-1)	DENOTES BALCONY BEING LIMITED COMMON PROPERTY FOR THE EXCLUSIVE USE OF STRATA LOT 1 (TYPICAL)
(RD-420)	DENOTES ROOF DECK BEING LIMITED COMMON PROPERTY FOR THE EXCLUSIVE USE OF STRATA LOT 420 (TYPICAL)

LCP AREAS ARE DEFINED AS TO HEIGHT BY THE CENTRE OF THE FLOOR ABOVE OR ITS EXTENSION OR WHERE THERE IS NO FLOOR ABOVE, BY THE AVERAGE HEIGHT OF A STRATA LOT WITHIN THE SAME BUILDING, UNLESS OTHERWISE NOTED

SECTION ARROWS POINT IN THE DIRECTION OF VIEW

www.BCStrataPlans.com

BUTLER SUNDVICK

JESSE MORIN, BCLS
Date: SEPTEMBER 16, 2022
File: 4772\Strata\Final
Dwg: 4772-FS

STRATA PLAN EPS8443

TOWER 1
LEVEL 40

0 5 10

SCALE 1 : 100 DISTANCES ARE IN METRES

THE INTENDED PLOT SCALE OF THIS PLAN IS 560 mm IN WIDTH BY 432 mm IN HEIGHT (C SIZE) WHEN PLOTTED AT A SCALE OF 1:100.

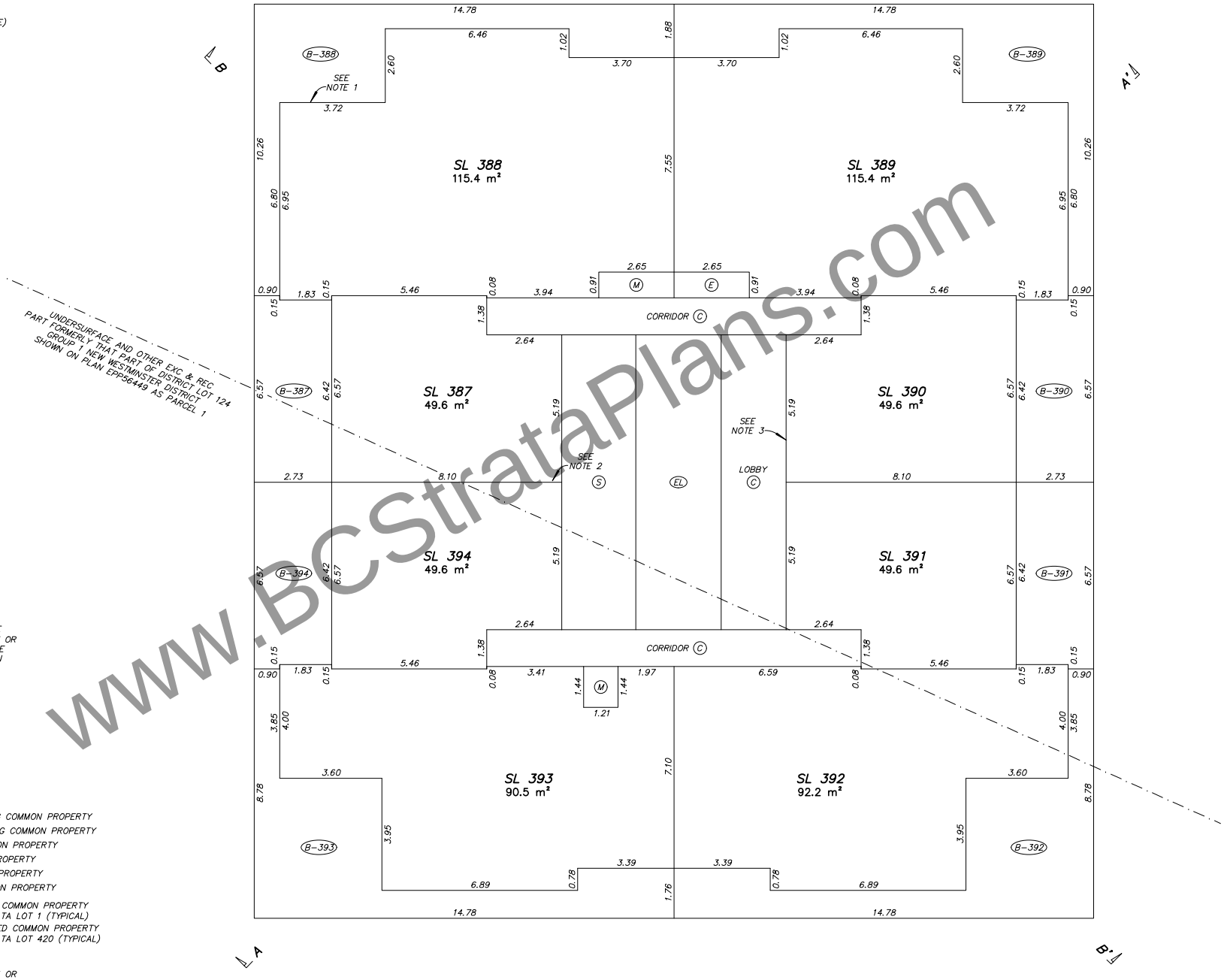

NOTES:

1. STRATA LOT BOUNDARY EXTERIOR FACE OF EXTERIOR WALLS (TYPICAL)
2. STRATA LOT BOUNDARY CENTRELINE OF DEMISING WALLS BETWEEN STRATA LOTS (TYPICAL)
3. STRATA LOT BOUNDARY EXTERIOR FACE OF WALLS ADJACENT TO COMMON AREAS (TYPICAL)
4. STRATA LOT BOUNDARY CENTRELINE FLOOR/CEILING (TYPICAL)
5. UPPER LIMIT OF LCP IS EXTENSION OF THE CENTRELINE OF THE FLOOR/CEILING ABOVE OR WHERE THERE IS NO FLOOR ABOVE, BY THE AVERAGE HEIGHT OF A STRATA LOT WITHIN THE SAME BUILDING (TYPICAL)

LEGEND

m²	DENOTES SQUARE METRES
SL	DENOTES STRATA LOT
PT	DENOTES PART
T	DENOTES TOTAL
Ex.	DENOTES EXPLANATORY
(C)	DENOTES COMMON PROPERTY
(E)	DENOTES ELECTRICAL ROOM BEING COMMON PROPERTY
(M)	DENOTES MECHANICAL ROOM BEING COMMON PROPERTY
(V)	DENOTES VESTIBULE BEING COMMON PROPERTY
(D)	DENOTES DUCT BEING COMMON PROPERTY
(S)	DENOTES STAIRS BEING COMMON PROPERTY
(EL)	DENOTES ELEVATOR BEING COMMON PROPERTY
(B-1)	DENOTES BALCONY BEING LIMITED COMMON PROPERTY FOR THE EXCLUSIVE USE OF STRATA LOT 1 (TYPICAL)
(RD-420)	DENOTES ROOF DECK BEING LIMITED COMMON PROPERTY FOR THE EXCLUSIVE USE OF STRATA LOT 420 (TYPICAL)

LCP AREAS ARE DEFINED AS TO HEIGHT BY THE CENTRE OF THE FLOOR ABOVE OR ITS EXTENSION OR WHERE THERE IS NO FLOOR ABOVE, BY THE AVERAGE HEIGHT OF A STRATA LOT WITHIN THE SAME BUILDING, UNLESS OTHERWISE NOTED

SECTION ARROWS POINT IN THE DIRECTION OF VIEW

BUTLER SUNDVICK

JESSE MORIN, BCLS
Date: SEPTEMBER 16, 2022
File: 4772\Strata\Final
Dwg: 4772-FS

www.BCStrataPlans.com

STRATA PLAN EPS8443

TOWER 1
LEVEL 41

0 5 10

SCALE 1 : 100 DISTANCES ARE IN METRES

THE INTENDED PLOT SCALE OF THIS PLAN IS 560 mm IN WIDTH BY 432 mm IN HEIGHT (C SIZE) WHEN PLOTTED AT A SCALE OF 1:100.

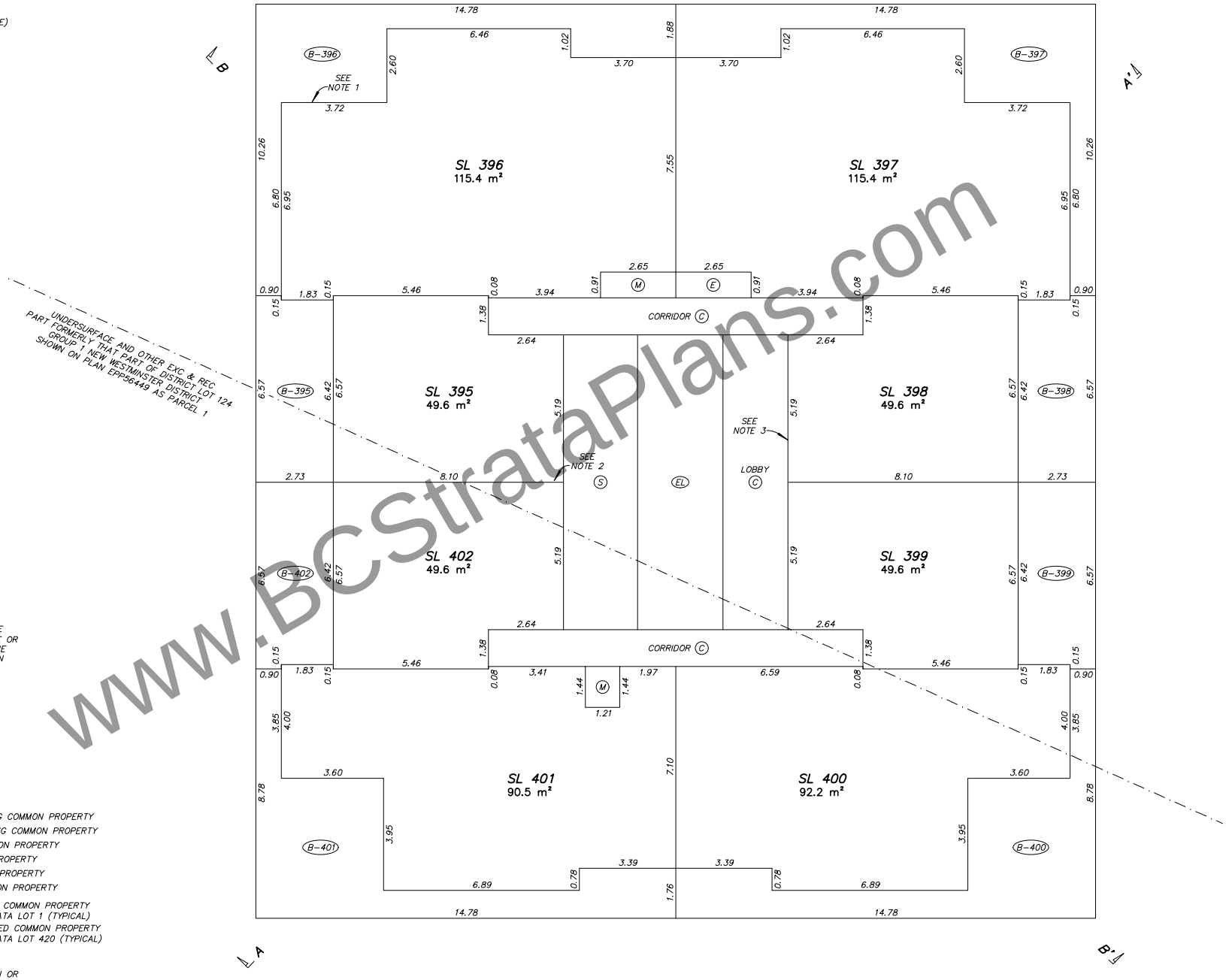

NOTES:

1. STRATA LOT BOUNDARY EXTERIOR FACE OF EXTERIOR WALLS (TYPICAL)
2. STRATA LOT BOUNDARY CENTRELINE OF DEMISING WALLS BETWEEN STRATA LOTS (TYPICAL)
3. STRATA LOT BOUNDARY EXTERIOR FACE OF WALLS ADJACENT TO COMMON AREAS (TYPICAL)
4. STRATA LOT BOUNDARY CENTRELINE FLOOR/CEILING (TYPICAL)
5. UPPER LIMIT OF LCP IS EXTENSION OF THE CENTRELINE OF THE FLOOR/CEILING ABOVE OR WHERE THERE IS NO FLOOR ABOVE, BY THE AVERAGE HEIGHT OF A STRATA LOT WITHIN THE SAME BUILDING (TYPICAL)

LEGEND

m²	DENOTES SQUARE METRES
SL	DENOTES STRATA LOT
PT	DENOTES PART
T	DENOTES TOTAL
Ex.	DENOTES EXPLANATORY
(C)	DENOTES COMMON PROPERTY
(E)	DENOTES ELECTRICAL ROOM BEING COMMON PROPERTY
(M)	DENOTES MECHANICAL ROOM BEING COMMON PROPERTY
(V)	DENOTES VESTIBULE BEING COMMON PROPERTY
(D)	DENOTES DUCT BEING COMMON PROPERTY
(S)	DENOTES STAIRS BEING COMMON PROPERTY
(EL)	DENOTES ELEVATOR BEING COMMON PROPERTY
(B-1)	DENOTES BALCONY BEING LIMITED COMMON PROPERTY FOR THE EXCLUSIVE USE OF STRATA LOT 1 (TYPICAL)
(RD-420)	DENOTES ROOF DECK BEING LIMITED COMMON PROPERTY FOR THE EXCLUSIVE USE OF STRATA LOT 420 (TYPICAL)

LCP AREAS ARE DEFINED AS TO HEIGHT BY THE CENTRE OF THE FLOOR ABOVE OR ITS EXTENSION OR WHERE THERE IS NO FLOOR ABOVE, BY THE AVERAGE HEIGHT OF A STRATA LOT WITHIN THE SAME BUILDING, UNLESS OTHERWISE NOTED

SECTION ARROWS POINT IN THE DIRECTION OF VIEW

www.BCStrataPlans.com

BUTLER SUNDVICK

JESSE MORIN, BCLS
Date: SEPTEMBER 16, 2022
File: 4772\Strata\Final
Dwg: 4772-FS

STRATA PLAN EPS8443

TOWER 1
LEVEL 42

0 5 10

SCALE 1 : 100 DISTANCES ARE IN METRES

THE INTENDED PLOT SCALE OF THIS PLAN IS 560 mm IN WIDTH BY 432 mm IN HEIGHT (C SIZE) WHEN PLOTTED AT A SCALE OF 1:100.

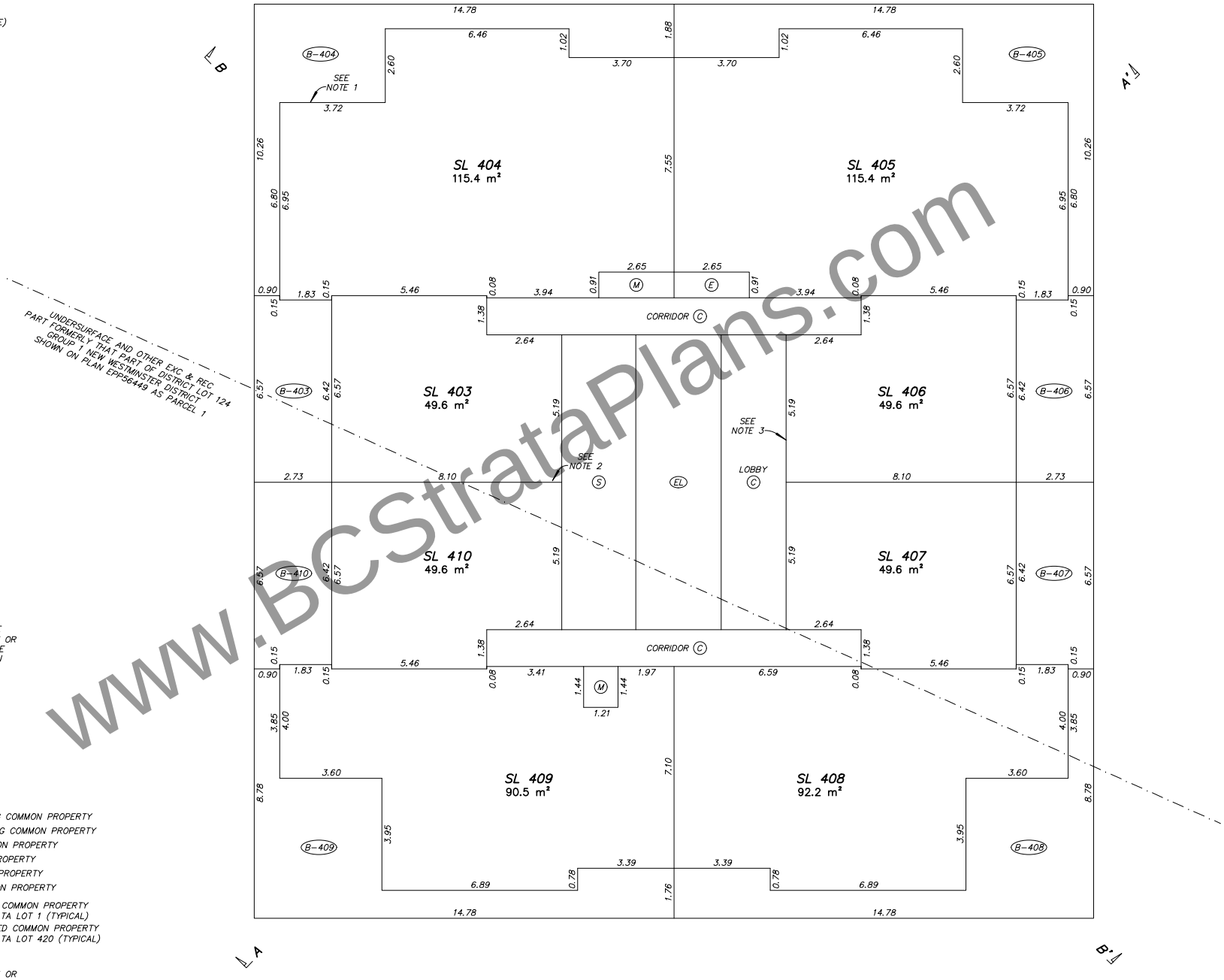

NOTES:

1. STRATA LOT BOUNDARY EXTERIOR FACE OF EXTERIOR WALLS (TYPICAL)
2. STRATA LOT BOUNDARY CENTRELINE OF DEMISING WALLS BETWEEN STRATA LOTS (TYPICAL)
3. STRATA LOT BOUNDARY EXTERIOR FACE OF WALLS ADJACENT TO COMMON AREAS (TYPICAL)
4. STRATA LOT BOUNDARY CENTRELINE FLOOR/CEILING (TYPICAL)
5. UPPER LIMIT OF LCP IS EXTENSION OF THE CENTRELINE OF THE FLOOR/CEILING ABOVE OR WHERE THERE IS NO FLOOR ABOVE, BY THE AVERAGE HEIGHT OF A STRATA LOT WITHIN THE SAME BUILDING (TYPICAL)

LEGEND

m²	DENOTES SQUARE METRES
SL	DENOTES STRATA LOT
PT	DENOTES PART
T	DENOTES TOTAL
Ex.	DENOTES EXPLANATORY
(C)	DENOTES COMMON PROPERTY
(E)	DENOTES ELECTRICAL ROOM BEING COMMON PROPERTY
(M)	DENOTES MECHANICAL ROOM BEING COMMON PROPERTY
(V)	DENOTES VESTIBULE BEING COMMON PROPERTY
(D)	DENOTES DUCT BEING COMMON PROPERTY
(S)	DENOTES STAIRS BEING COMMON PROPERTY
(EL)	DENOTES ELEVATOR BEING COMMON PROPERTY
(B-1)	DENOTES BALCONY BEING LIMITED COMMON PROPERTY FOR THE EXCLUSIVE USE OF STRATA LOT 1 (TYPICAL)
(RD-420)	DENOTES ROOF DECK BEING LIMITED COMMON PROPERTY FOR THE EXCLUSIVE USE OF STRATA LOT 420 (TYPICAL)

LCP AREAS ARE DEFINED AS TO HEIGHT BY THE CENTRE OF THE FLOOR ABOVE OR ITS EXTENSION OR WHERE THERE IS NO FLOOR ABOVE, BY THE AVERAGE HEIGHT OF A STRATA LOT WITHIN THE SAME BUILDING, UNLESS OTHERWISE NOTED

SECTION ARROWS POINT IN THE DIRECTION OF VIEW

www.BCStrataPlans.com

BUTLER SUNDVICK

JESSE MORIN, BCLS
Date: SEPTEMBER 16, 2022
File: 4772\Strata\Final
Dwg: 4772-FS

STRATA PLAN EPS8443

TOWER 1
LEVEL 43

0 5 10

SCALE 1 : 100 DISTANCES ARE IN METRES

THE INTENDED PLOT SCALE OF THIS PLAN IS 560 mm IN WIDTH BY 432 mm IN HEIGHT (C SIZE) WHEN PLOTTED AT A SCALE OF 1:100.

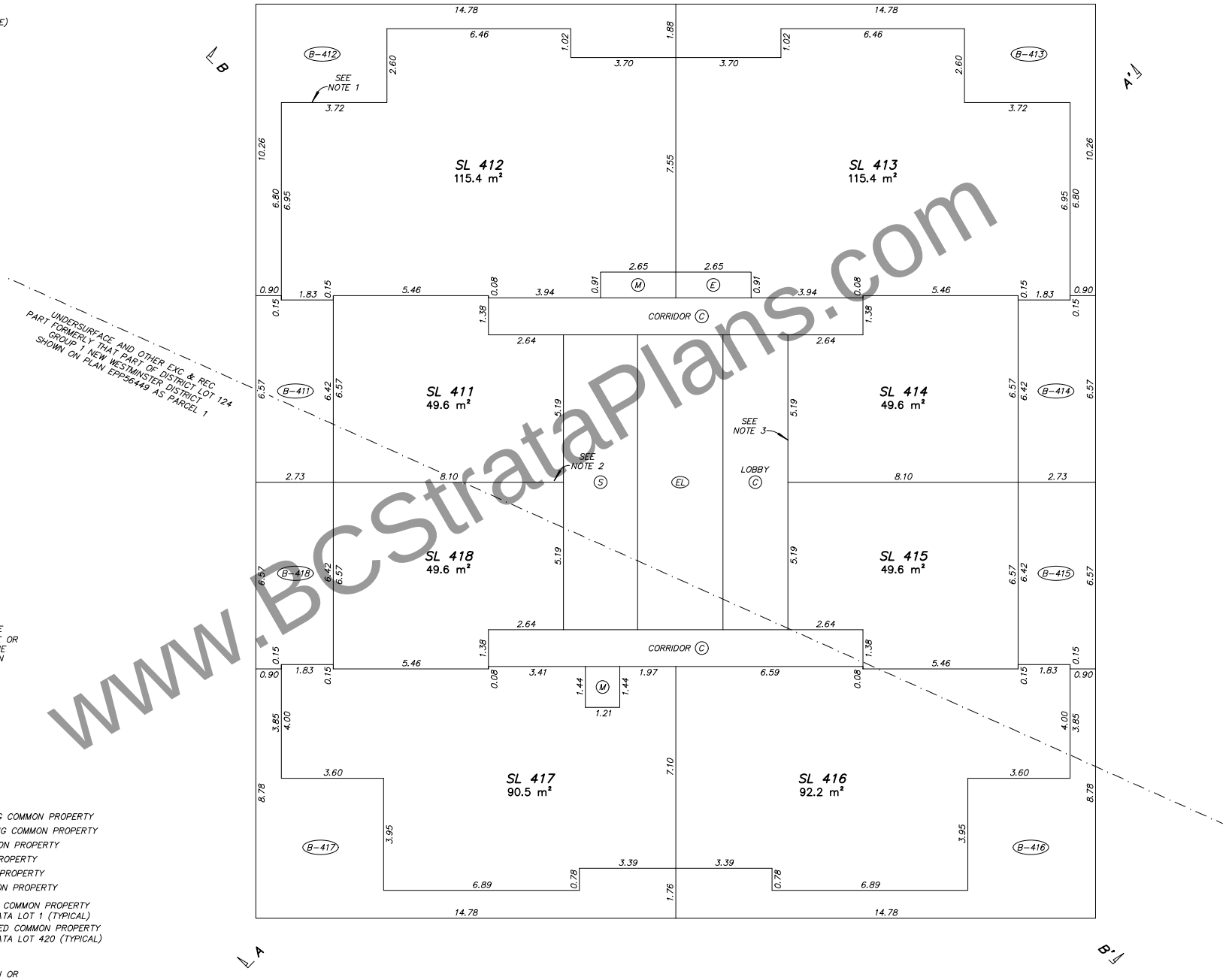

NOTES:

1. STRATA LOT BOUNDARY EXTERIOR FACE OF EXTERIOR WALLS (TYPICAL)
2. STRATA LOT BOUNDARY CENTRELINE OF DEMISING WALLS BETWEEN STRATA LOTS (TYPICAL)
3. STRATA LOT BOUNDARY EXTERIOR FACE OF WALLS ADJACENT TO COMMON AREAS (TYPICAL)
4. STRATA LOT BOUNDARY CENTRELINE FLOOR/CEILING (TYPICAL)
5. UPPER LIMIT OF LCP IS EXTENSION OF THE CENTRELINE OF THE FLOOR/CEILING ABOVE OR WHERE THERE IS NO FLOOR ABOVE, BY THE AVERAGE HEIGHT OF A STRATA LOT WITHIN THE SAME BUILDING (TYPICAL)

LEGEND

m²	DENOTES SQUARE METRES
SL	DENOTES STRATA LOT
PT	DENOTES PART
T	DENOTES TOTAL
Ex.	DENOTES EXPLANATORY
(C)	DENOTES COMMON PROPERTY
(E)	DENOTES ELECTRICAL ROOM BEING COMMON PROPERTY
(M)	DENOTES MECHANICAL ROOM BEING COMMON PROPERTY
(V)	DENOTES VESTIBULE BEING COMMON PROPERTY
(D)	DENOTES DUCT BEING COMMON PROPERTY
(S)	DENOTES STAIRS BEING COMMON PROPERTY
(EL)	DENOTES ELEVATOR BEING COMMON PROPERTY
(B-1)	DENOTES BALCONY BEING LIMITED COMMON PROPERTY FOR THE EXCLUSIVE USE OF STRATA LOT 1 (TYPICAL)
(RD-420)	DENOTES ROOF DECK BEING LIMITED COMMON PROPERTY FOR THE EXCLUSIVE USE OF STRATA LOT 420 (TYPICAL)

LCP AREAS ARE DEFINED AS TO HEIGHT BY THE CENTRE OF THE FLOOR ABOVE OR ITS EXTENSION OR WHERE THERE IS NO FLOOR ABOVE, BY THE AVERAGE HEIGHT OF A STRATA LOT WITHIN THE SAME BUILDING, UNLESS OTHERWISE NOTED

SECTION ARROWS POINT IN THE DIRECTION OF VIEW

www.BCStrataPlans.com

BUTLER SUNDVICK

JESSE MORIN, BCLS
Date: SEPTEMBER 16, 2022
File: 4772\Strata\Final
Dwg: 4772-FS

STRATA PLAN EPS8443

TOWER 1
LEVEL 44

0 5 10

SCALE 1 : 100 DISTANCES ARE IN METRES

THE INTENDED PLOT SCALE OF THIS PLAN IS 560 mm IN WIDTH BY 432 mm IN HEIGHT (C SIZE) WHEN PLOTTED AT A SCALE OF 1:100.

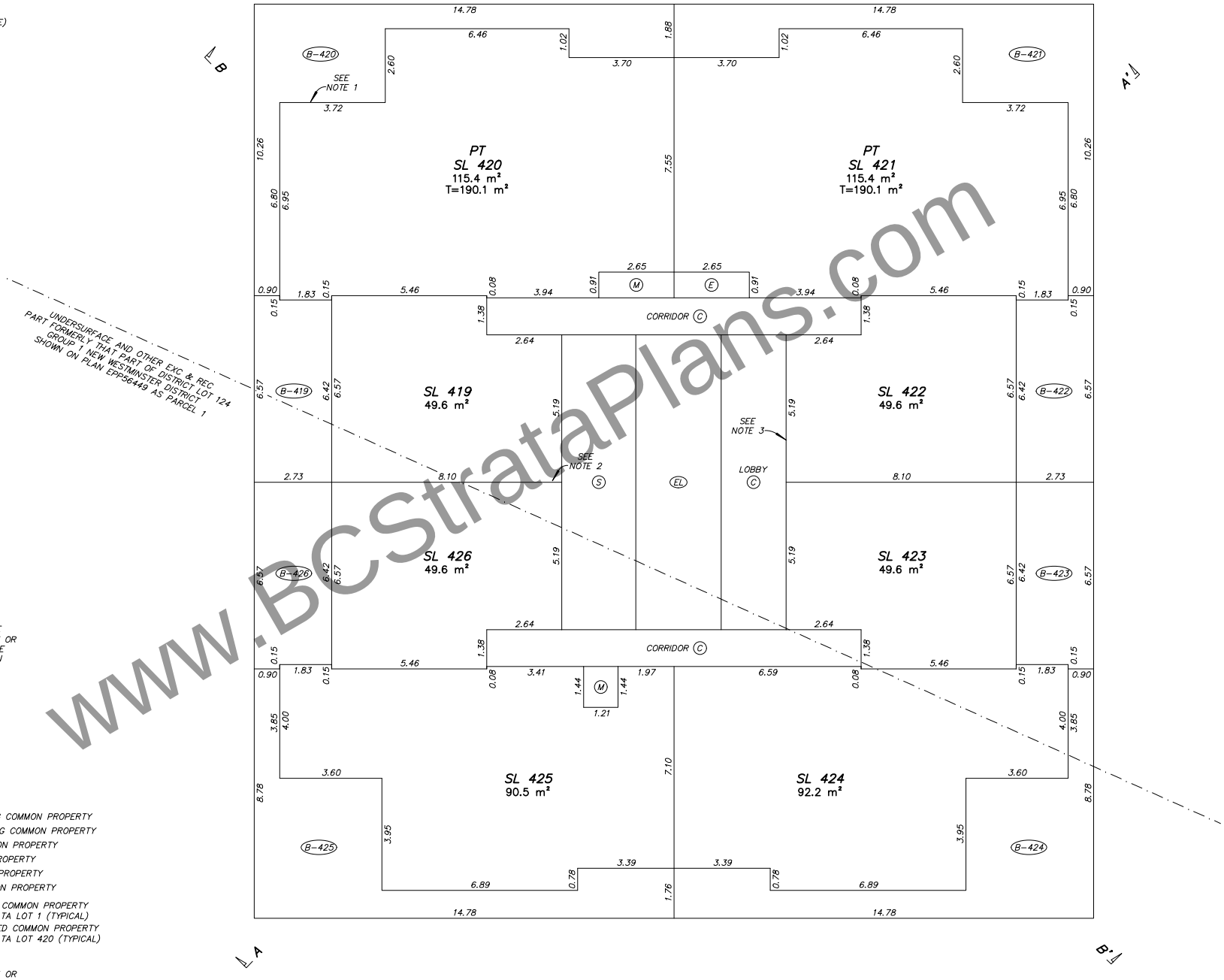

NOTES:

1. STRATA LOT BOUNDARY EXTERIOR FACE OF EXTERIOR WALLS (TYPICAL)
2. STRATA LOT BOUNDARY CENTRELINE OF DEMISING WALLS BETWEEN STRATA LOTS (TYPICAL)
3. STRATA LOT BOUNDARY EXTERIOR FACE OF WALLS ADJACENT TO COMMON AREAS (TYPICAL)
4. STRATA LOT BOUNDARY CENTRELINE FLOOR/CEILING (TYPICAL)
5. UPPER LIMIT OF LCP IS EXTENSION OF THE CENTRELINE OF THE FLOOR/CEILING ABOVE OR WHERE THERE IS NO FLOOR ABOVE, BY THE AVERAGE HEIGHT OF A STRATA LOT WITHIN THE SAME BUILDING (TYPICAL)

LEGEND

m²	DENOTES SQUARE METRES
SL	DENOTES STRATA LOT
PT	DENOTES PART
T	DENOTES TOTAL
Ex.	DENOTES EXPLANATORY
(C)	DENOTES COMMON PROPERTY
(E)	DENOTES ELECTRICAL ROOM BEING COMMON PROPERTY
(M)	DENOTES MECHANICAL ROOM BEING COMMON PROPERTY
(V)	DENOTES VESTIBULE BEING COMMON PROPERTY
(D)	DENOTES DUCT BEING COMMON PROPERTY
(S)	DENOTES STAIRS BEING COMMON PROPERTY
(EL)	DENOTES ELEVATOR BEING COMMON PROPERTY
(B-1)	DENOTES BALCONY BEING LIMITED COMMON PROPERTY FOR THE EXCLUSIVE USE OF STRATA LOT 1 (TYPICAL)
(RD-420)	DENOTES ROOF DECK BEING LIMITED COMMON PROPERTY FOR THE EXCLUSIVE USE OF STRATA LOT 420 (TYPICAL)

LCP AREAS ARE DEFINED AS TO HEIGHT BY THE CENTRE OF THE FLOOR ABOVE OR ITS EXTENSION OR WHERE THERE IS NO FLOOR ABOVE, BY THE AVERAGE HEIGHT OF A STRATA LOT WITHIN THE SAME BUILDING, UNLESS OTHERWISE NOTED

SECTION ARROWS POINT IN THE DIRECTION OF VIEW

BUTLER SUNDVICK

JESSE MORIN, BCLS
Date: SEPTEMBER 16, 2022
File: 4772\Strata\Final
Dwg: 4772-FS

www.BCStrataPlans.com

STRATA PLAN EPS8443

TOWER 1
LEVEL 45

0 5 10

SCALE 1 : 100 DISTANCES ARE IN METRES

THE INTENDED PLOT SCALE OF THIS PLAN IS 560 mm IN WIDTH BY 432 mm IN HEIGHT (C SIZE) WHEN PLOTTED AT A SCALE OF 1:100.

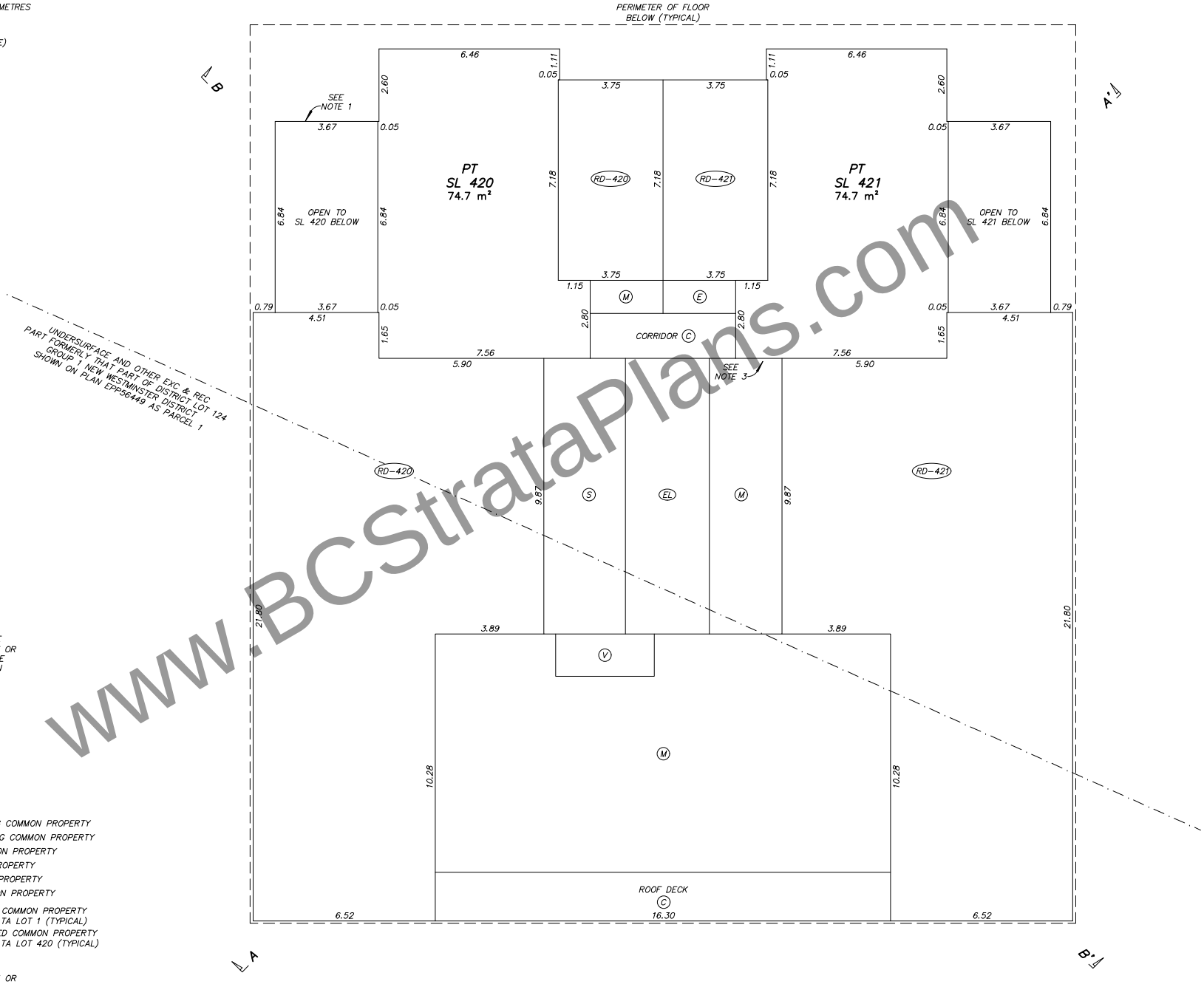

NOTES:

1. STRATA LOT BOUNDARY EXTERIOR FACE OF EXTERIOR WALLS (TYPICAL)
2. STRATA LOT BOUNDARY CENTRELINE OF DEMISING WALLS BETWEEN STRATA LOTS (TYPICAL)
3. STRATA LOT BOUNDARY EXTERIOR FACE OF WALLS ADJACENT TO COMMON AREAS (TYPICAL)
4. STRATA LOT BOUNDARY CENTRELINE FLOOR/CEILING (TYPICAL)
5. UPPER LIMIT OF LCP IS EXTENSION OF THE CENTRELINE OF THE FLOOR/CEILING ABOVE OR WHERE THERE IS NO FLOOR ABOVE, BY THE AVERAGE HEIGHT OF A STRATA LOT WITHIN THE SAME BUILDING (TYPICAL)

LEGEND

m²	DENOTES SQUARE METRES
SL	DENOTES STRATA LOT
PT	DENOTES PART
T	DENOTES TOTAL
Ex.	DENOTES EXPLANATORY
C	DENOTES COMMON PROPERTY
E	DENOTES ELECTRICAL ROOM BEING COMMON PROPERTY
M	DENOTES MECHANICAL ROOM BEING COMMON PROPERTY
V	DENOTES VESTIBULE BEING COMMON PROPERTY
D	DENOTES DUCT BEING COMMON PROPERTY
S	DENOTES STAIRS BEING COMMON PROPERTY
EL	DENOTES ELEVATOR BEING COMMON PROPERTY
B-1	DENOTES BALCONY BEING LIMITED COMMON PROPERTY FOR THE EXCLUSIVE USE OF STRATA LOT 1 (TYPICAL)
RD-420	DENOTES ROOF DECK BEING LIMITED COMMON PROPERTY FOR THE EXCLUSIVE USE OF STRATA LOT 420 (TYPICAL)

LCP AREAS ARE DEFINED AS TO HEIGHT BY THE CENTRE OF THE FLOOR ABOVE OR ITS EXTENSION OR WHERE THERE IS NO FLOOR ABOVE, BY THE AVERAGE HEIGHT OF A STRATA LOT WITHIN THE SAME BUILDING, UNLESS OTHERWISE NOTED

SECTION ARROWS POINT IN THE DIRECTION OF VIEW

BUTLER SUNDVICK

JESSE MORIN, BCLS
Date: SEPTEMBER 16, 2022
File: 4772\Strata\Final
Dwg: 4772-FS

www.BCStrataPlans.com

TOWER 1
ROOF

0 5 10

SCALE 1 : 100 DISTANCES ARE IN METRES

THE INTENDED PLOT SCALE OF THIS PLAN IS 560 mm IN WIDTH BY 432 mm IN HEIGHT (C SIZE) WHEN PLOTTED AT A SCALE OF 1:100.

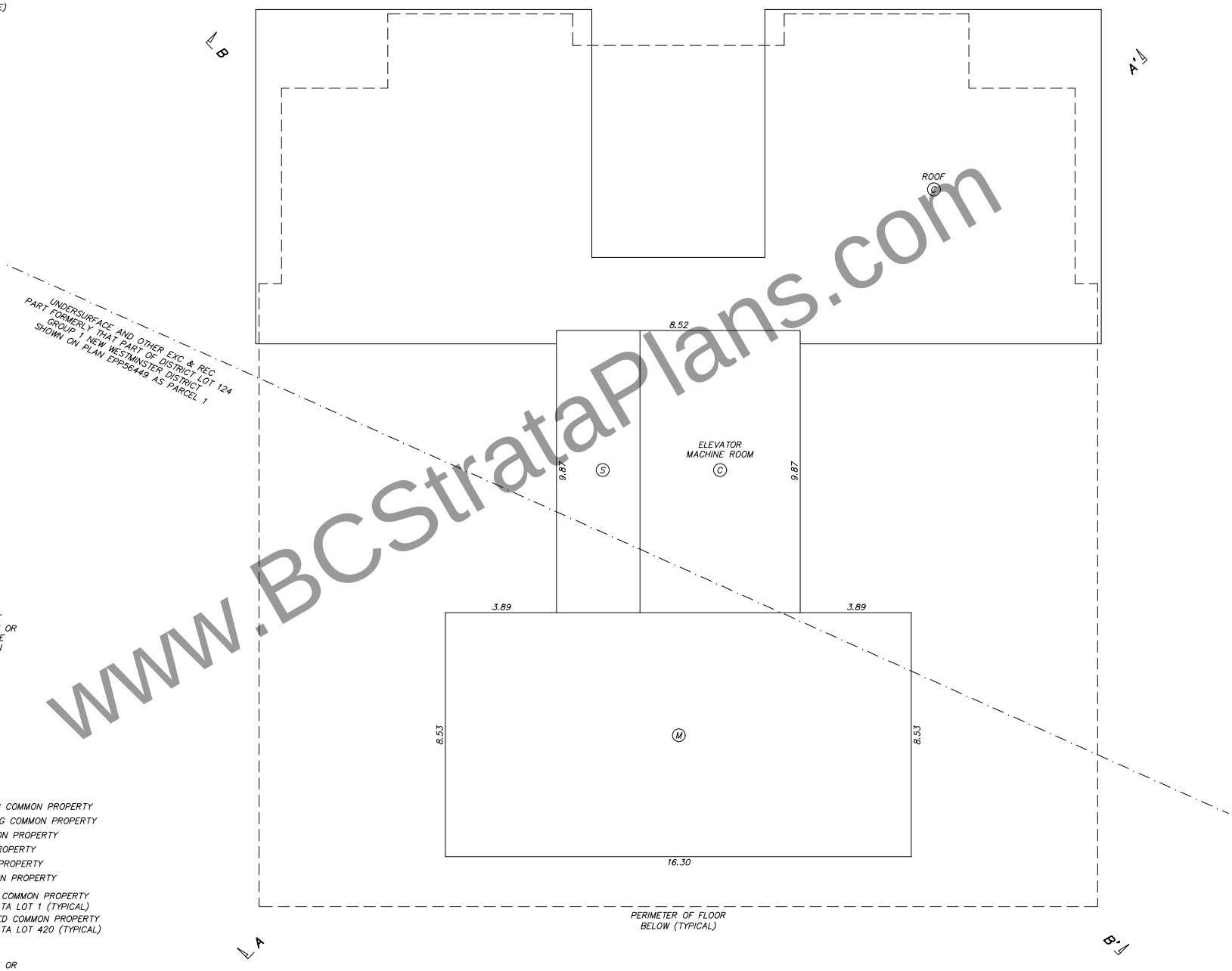

NOTES:

1. STRATA LOT BOUNDARY EXTERIOR FACE OF EXTERIOR WALLS (TYPICAL)
2. STRATA LOT BOUNDARY CENTRELINE OF DEMISING WALLS BETWEEN STRATA LOTS (TYPICAL)
3. STRATA LOT BOUNDARY EXTERIOR FACE OF WALLS ADJACENT TO COMMON AREAS (TYPICAL)
4. STRATA LOT BOUNDARY CENTRELINE FLOOR/CEILING (TYPICAL)
5. UPPER LIMIT OF LCP IS EXTENSION OF THE CENTRELINE OF THE FLOOR/CEILING ABOVE OR WHERE THERE IS NO FLOOR ABOVE, BY THE AVERAGE HEIGHT OF A STRATA LOT WITHIN THE SAME BUILDING (TYPICAL)

LEGEND

m^2	DENOTES SQUARE METRES
SL	DENOTES STRATA LOT
PT	DENOTES PART
T	DENOTES TOTAL
Ex.	DENOTES EXPLANATORY
C	DENOTES COMMON PROPERTY
E	DENOTES ELECTRICAL ROOM BEING COMMON PROPERTY
M	DENOTES MECHANICAL ROOM BEING COMMON PROPERTY
V	DENOTES VESTIBULE BEING COMMON PROPERTY
D	DENOTES DUCT BEING COMMON PROPERTY
S	DENOTES STAIRS BEING COMMON PROPERTY
EL	DENOTES ELEVATOR BEING COMMON PROPERTY
B-1	DENOTES BALCONY BEING LIMITED COMMON PROPERTY FOR THE EXCLUSIVE USE OF STRATA LOT 1 (TYPICAL)
RD-420	DENOTES ROOF DECK BEING LIMITED COMMON PROPERTY FOR THE EXCLUSIVE USE OF STRATA LOT 420 (TYPICAL)

LCP AREAS ARE DEFINED AS TO HEIGHT BY THE CENTRE OF THE FLOOR ABOVE OR ITS EXTENSION OR WHERE THERE IS NO FLOOR ABOVE, BY THE AVERAGE HEIGHT OF A STRATA LOT WITHIN THE SAME BUILDING, UNLESS OTHERWISE NOTED

SECTION ARROWS POINT IN THE DIRECTION OF VIEW

www.BCStrataPlans.com

BUTLER SUNDVICK
JESSE MORIN, BCLS
Date: SEPTEMBER 16, 2022
File: 4772\Strata\Final
Dwg: 4772-FS

STRATA PLAN EPS8443

LEVEL 1

0 5 10 20

SCALE 1 : 200 DISTANCES ARE IN METRES

THE INTENDED PLOT SCALE OF THIS PLAN IS 560 mm IN WIDTH BY 432 mm IN HEIGHT (C SIZE) WHEN PLOTTED AT A SCALE OF 1:200.

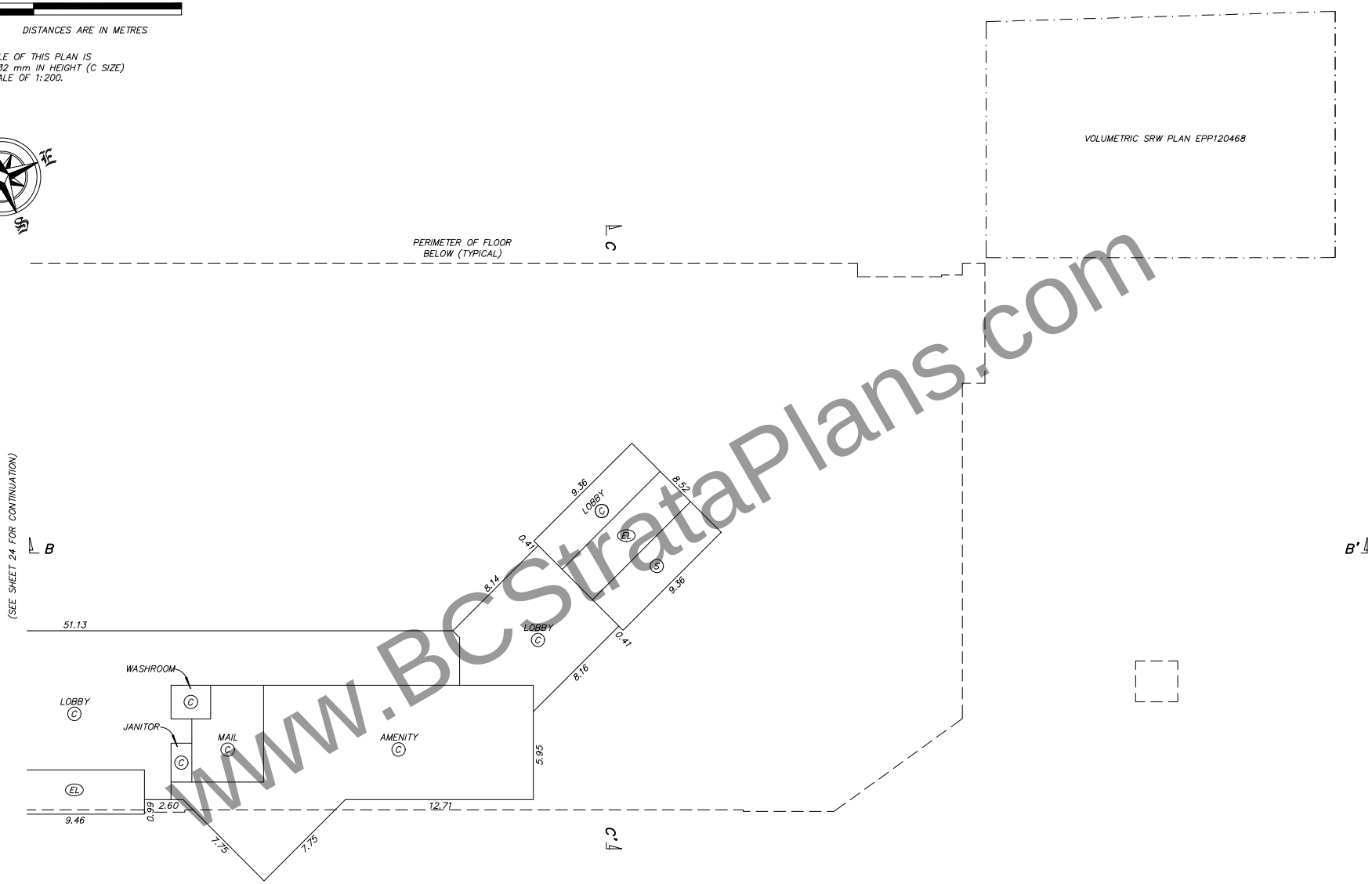

www.BCStrataPlans.com

LEGEND

Ex.	DENOTES EXPLANATORY PLAN
m²	DENOTES SQUARE METRES
SL	DENOTES STRATA LOT
IF	DENOTES INSIDE FACE
(C)	DENOTES COMMON PROPERTY
(E)	DENOTES ELECTRICAL ROOM BEING COMMON PROPERTY
(M)	DENOTES MECHANICAL ROOM BEING COMMON PROPERTY
(V)	DENOTES VESTIBULE BEING COMMON PROPERTY
(D)	DENOTES DUCT BEING COMMON PROPERTY
(S)	DENOTES STAIRS BEING COMMON PROPERTY
(EL)	DENOTES ELEVATOR BEING COMMON PROPERTY

SECTION ARROWS POINT IN THE DIRECTION OF VIEW

BUTLER SUNDVICK

JESSE MORIN, BCLS
Date: SEPTEMBER 16, 2022
File: 4772\Strata\Final
Dwg: 4772-FS

STRATA PLAN EPS8443

LEVEL 2

0 5 10 20

SCALE 1 : 200 DISTANCES ARE IN METRES

THE INTENDED PLOT SCALE OF THIS PLAN IS 560 mm IN WIDTH BY 432 mm IN HEIGHT (C SIZE) WHEN PLOTTED AT A SCALE OF 1:200.

VOLUMETRIC SRW PLAN EPP120468

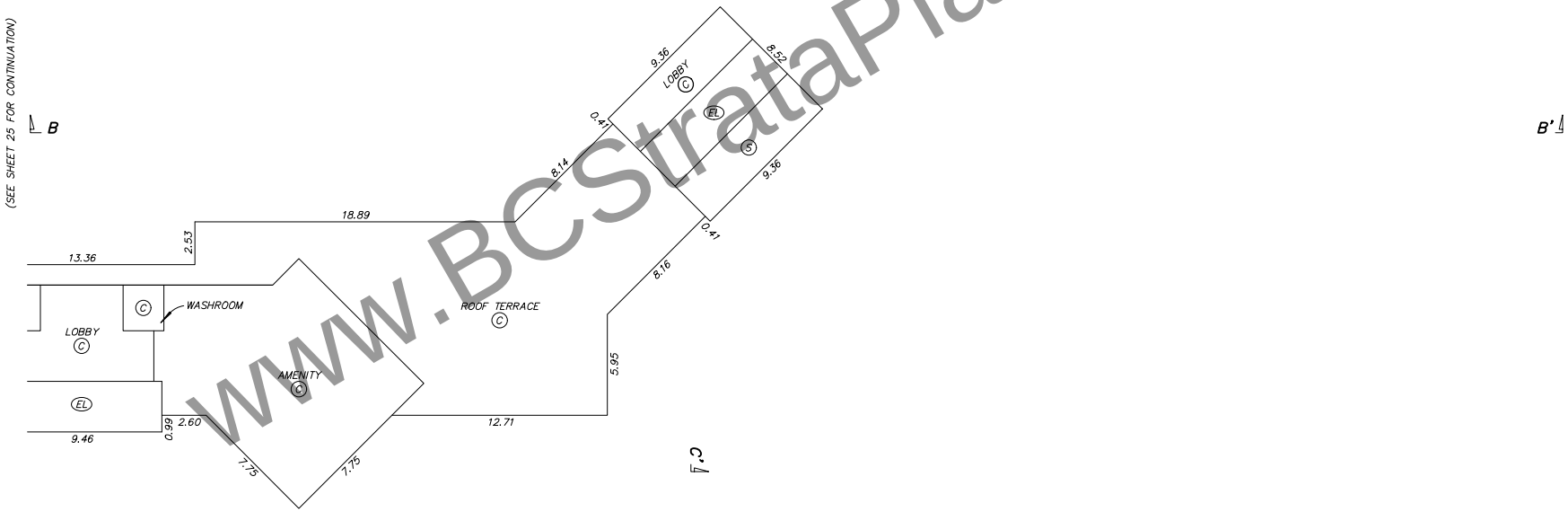

www.BCStrataPlans.com

LEGEND

Ex.	DENOTES EXPLANATORY PLAN
m²	DENOTES SQUARE METRES
SL	DENOTES STRATA LOT
IF	DENOTES INSIDE FACE
(C)	DENOTES COMMON PROPERTY
(E)	DENOTES ELECTRICAL ROOM BEING COMMON PROPERTY
(M)	DENOTES MECHANICAL ROOM BEING COMMON PROPERTY
(V)	DENOTES VESTIBULE BEING COMMON PROPERTY
(D)	DENOTES DUCT BEING COMMON PROPERTY
(S)	DENOTES STAIRS BEING COMMON PROPERTY
(EL)	DENOTES ELEVATOR BEING COMMON PROPERTY

SECTION ARROWS POINT IN THE DIRECTION OF VIEW

BUTLER SUNDVICK

JESSE MORIN, BCLS
Date: SEPTEMBER 16, 2022
File: 4772\Strata\Final
Dwg: 4772-FS

STRATA PLAN EPS8443

AMENITY ROOF LEVEL

0 5 10 20

SCALE 1 : 200 DISTANCES ARE IN METRES

THE INTENDED PLOT SCALE OF THIS PLAN IS
560 mm IN WIDTH BY 432 mm IN HEIGHT (C SIZE)
WHEN PLOTTED AT A SCALE OF 1:200.

VOLUMETRIC SRW PLAN EPP120468

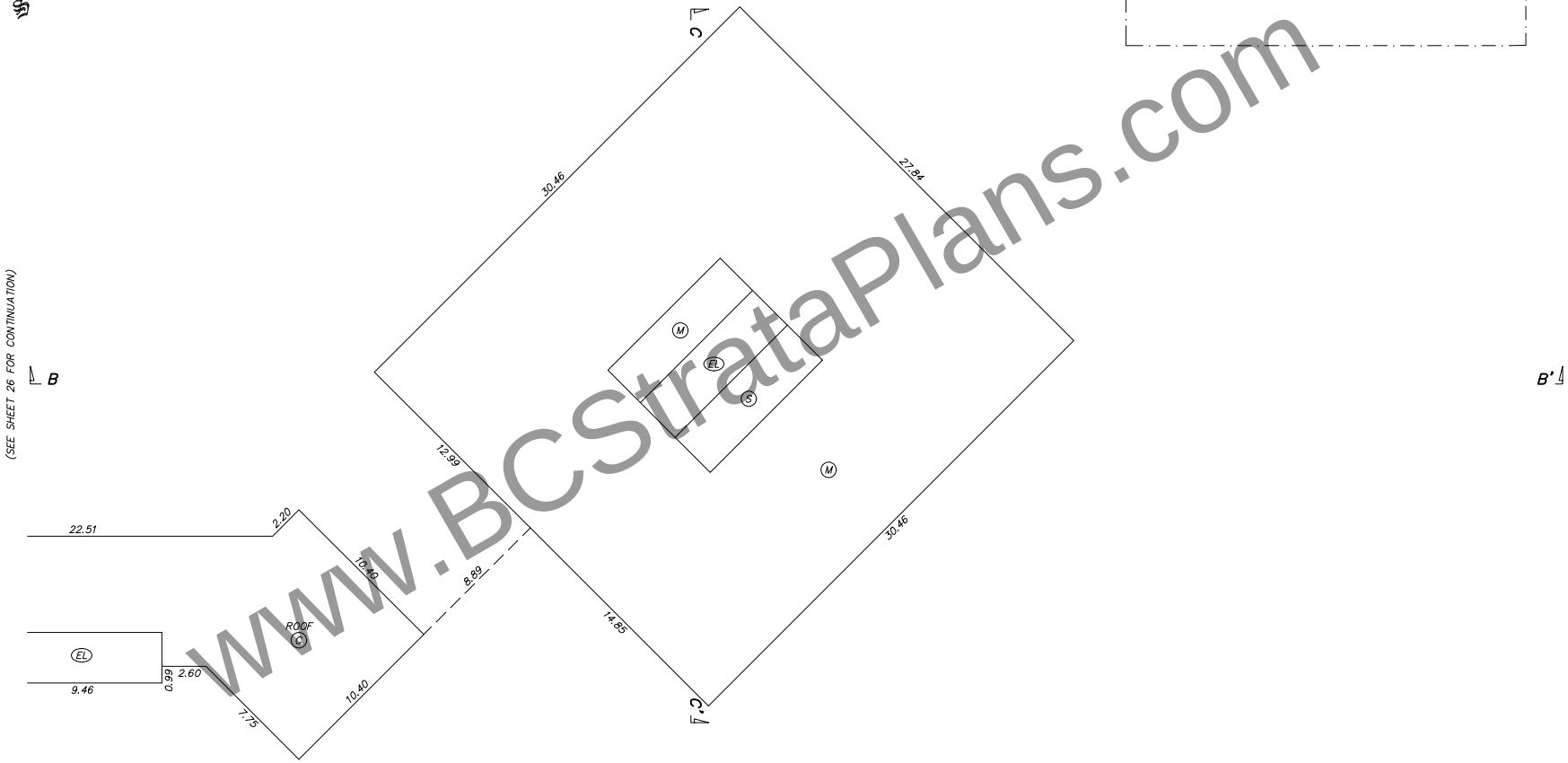

www.BCStrataPlans.com

LEGEND

Ex.	DENOTES EXPLANATORY PLAN
m²	DENOTES SQUARE METRES
SL	DENOTES STRATA LOT
IF	DENOTES INSIDE FACE
(C)	DENOTES COMMON PROPERTY
(E)	DENOTES ELECTRICAL ROOM BEING COMMON PROPERTY
(M)	DENOTES MECHANICAL ROOM BEING COMMON PROPERTY
(V)	DENOTES VESTIBULE BEING COMMON PROPERTY
(D)	DENOTES DUCT BEING COMMON PROPERTY
(S)	DENOTES STAIRS BEING COMMON PROPERTY
(EL)	DENOTES ELEVATOR BEING COMMON PROPERTY

SECTION ARROWS POINT IN THE DIRECTION OF VIEW

BUTLER SUNDVICK

JESSE MORIN, BCLS
Date: SEPTEMBER 16, 2022
File: 4772\Strata\Final
Dwg: 4772-FS

STRATA PLAN EPS8443

TOWER 2
LEVEL 3

0 5 10

SCALE 1 : 100 DISTANCES ARE IN METRES

THE INTENDED PLOT SCALE OF THIS PLAN IS 560 mm IN WIDTH BY 432 mm IN HEIGHT (C SIZE) WHEN PLOTTED AT A SCALE OF 1:100.

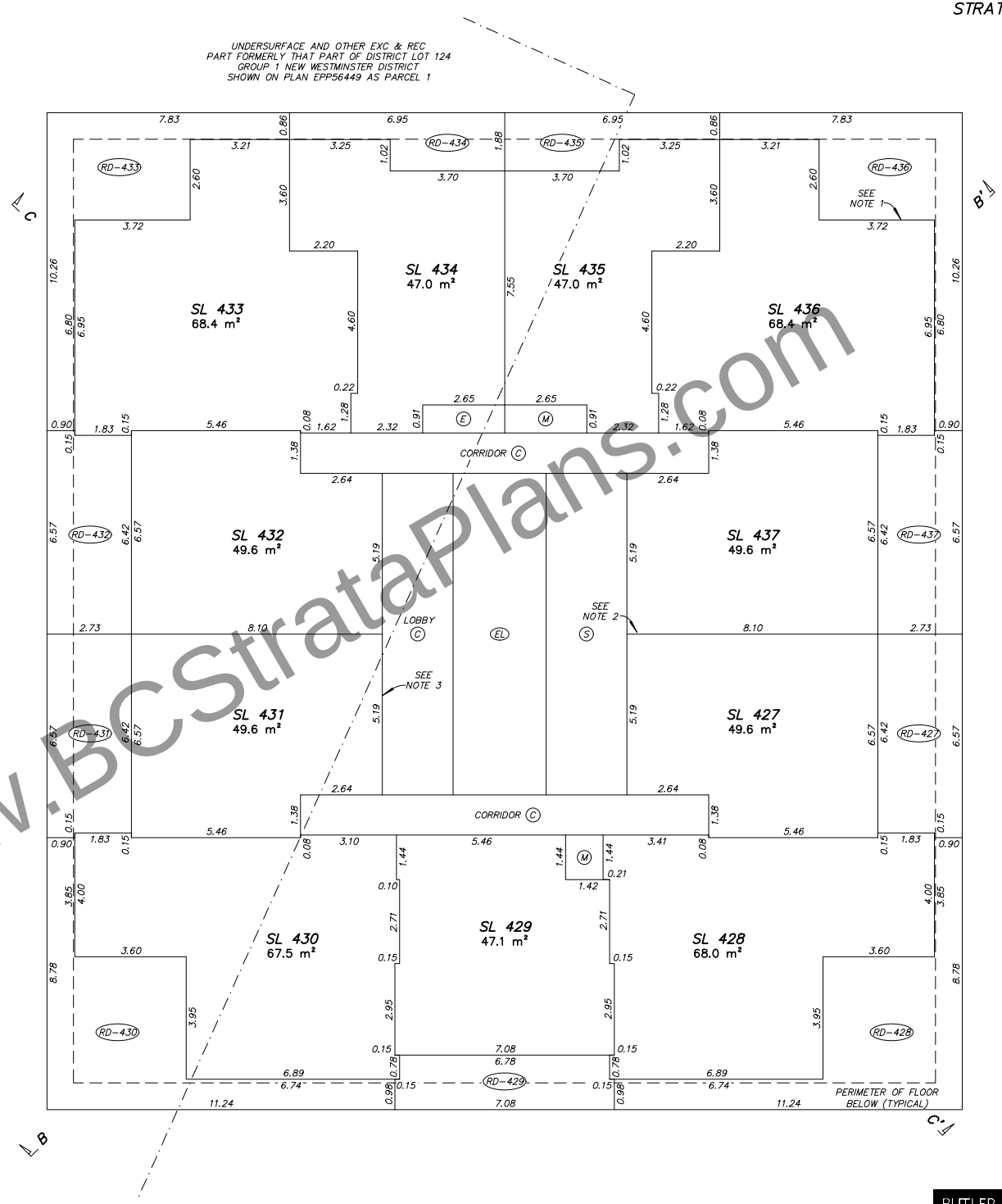

NOTES:

1. STRATA LOT BOUNDARY EXTERIOR FACE OF EXTERIOR WALLS (TYPICAL)
2. STRATA LOT BOUNDARY CENTRELINE OF DEMISING WALLS BETWEEN STRATA LOTS (TYPICAL)
3. STRATA LOT BOUNDARY EXTERIOR FACE OF WALLS ADJACENT TO COMMON AREAS (TYPICAL)
4. STRATA LOT BOUNDARY CENTRELINE FLOOR/CEILING (TYPICAL)
5. UPPER LIMIT OF LCP IS EXTENSION OF THE CENTRELINE OF THE FLOOR/CEILING ABOVE OR WHERE THERE IS NO FLOOR ABOVE, BY THE AVERAGE HEIGHT OF A STRATA LOT WITHIN THE SAME BUILDING (TYPICAL)

LEGEND

m²	DENOTES SQUARE METRES
SL	DENOTES STRATA LOT
PT	DENOTES PART
T	DENOTES TOTAL
Ex.	DENOTES EXPLANATORY
(C)	DENOTES COMMON PROPERTY
(E)	DENOTES ELECTRICAL ROOM BEING COMMON PROPERTY
(M)	DENOTES MECHANICAL ROOM BEING COMMON PROPERTY
(V)	DENOTES VESTIBULE BEING COMMON PROPERTY
(D)	DENOTES DUCT BEING COMMON PROPERTY
(S)	DENOTES STAIRS BEING COMMON PROPERTY
(EL)	DENOTES ELEVATOR BEING COMMON PROPERTY
(B-1)	DENOTES BALCONY BEING LIMITED COMMON PROPERTY FOR THE EXCLUSIVE USE OF STRATA LOT 1 (TYPICAL)
(RD-420)	DENOTES ROOF DECK BEING LIMITED COMMON PROPERTY FOR THE EXCLUSIVE USE OF STRATA LOT 420 (TYPICAL)

LCP AREAS ARE DEFINED AS TO HEIGHT BY THE CENTRE OF THE FLOOR ABOVE OR ITS EXTENSION OR WHERE THERE IS NO FLOOR ABOVE, BY THE AVERAGE HEIGHT OF A STRATA LOT WITHIN THE SAME BUILDING, UNLESS OTHERWISE NOTED

SECTION ARROWS POINT IN THE DIRECTION OF VIEW

BUTLER SUNDVICK

JESSE MORIN, BCLS
Date: SEPTEMBER 16, 2022
File: 4772\Strata\Final
Dwg: 4772-FS

www.BCStrataPlans.com

STRATA PLAN EPS8443

TOWER 2
LEVEL 4

0 5 10

SCALE 1 : 100 DISTANCES ARE IN METRES

THE INTENDED PLOT SCALE OF THIS PLAN IS 560 mm IN WIDTH BY 432 mm IN HEIGHT (C SIZE) WHEN PLOTTED AT A SCALE OF 1:100.

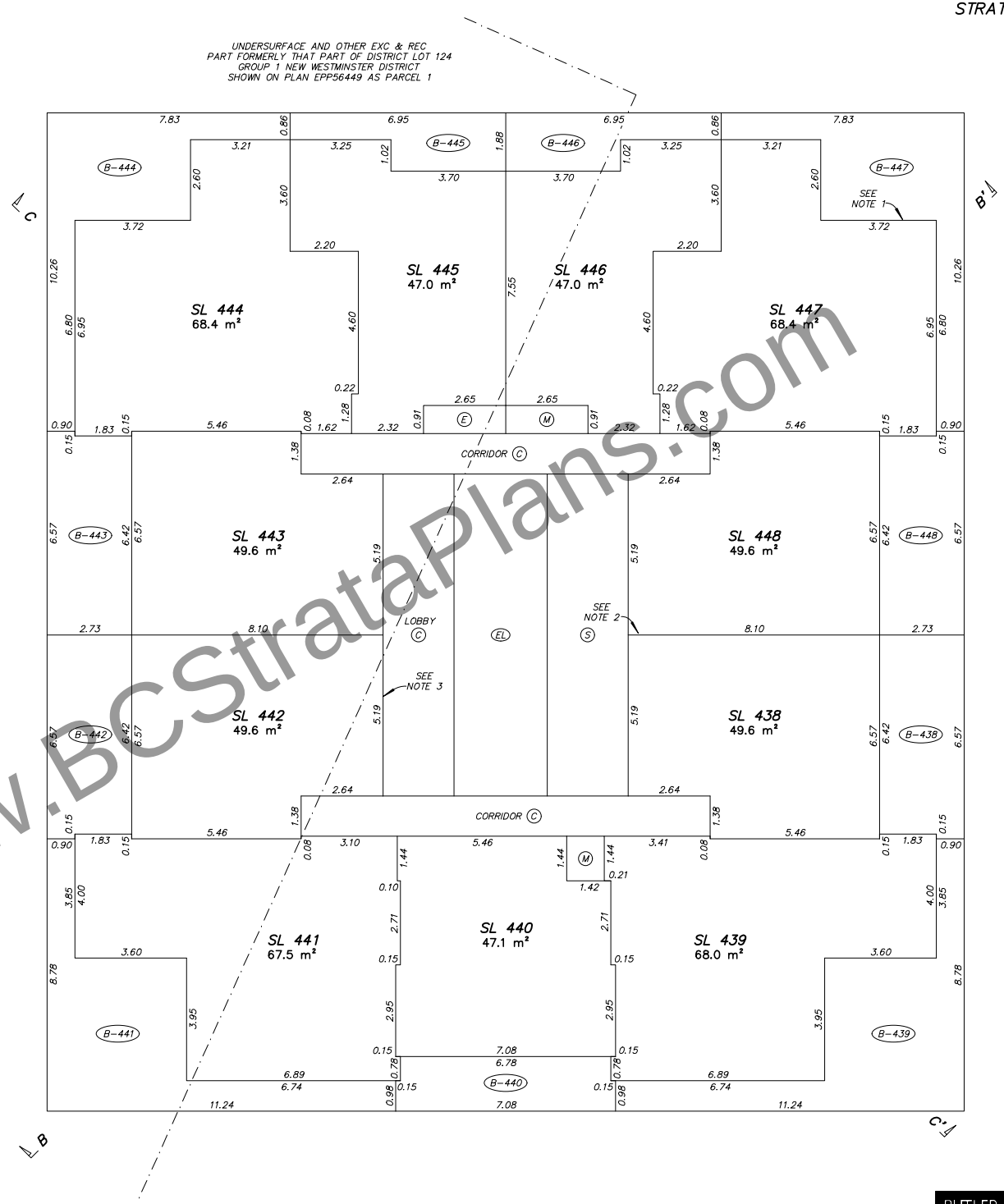

NOTES:

1. STRATA LOT BOUNDARY EXTERIOR FACE OF EXTERIOR WALLS (TYPICAL)
2. STRATA LOT BOUNDARY CENTRELINE OF DEMISING WALLS BETWEEN STRATA LOTS (TYPICAL)
3. STRATA LOT BOUNDARY EXTERIOR FACE OF WALLS ADJACENT TO COMMON AREAS (TYPICAL)
4. STRATA LOT BOUNDARY CENTRELINE FLOOR/CEILING (TYPICAL)
5. UPPER LIMIT OF LCP IS EXTENSION OF THE CENTRELINE OF THE FLOOR/CEILING ABOVE OR WHERE THERE IS NO FLOOR ABOVE, BY THE AVERAGE HEIGHT OF A STRATA LOT WITHIN THE SAME BUILDING (TYPICAL)

LEGEND

m²	DENOTES SQUARE METRES
SL	DENOTES STRATA LOT
PT	DENOTES PART
T	DENOTES TOTAL
Ex.	DENOTES EXPLANATORY
(C)	DENOTES COMMON PROPERTY
(E)	DENOTES ELECTRICAL ROOM BEING COMMON PROPERTY
(M)	DENOTES MECHANICAL ROOM BEING COMMON PROPERTY
(V)	DENOTES VESTIBULE BEING COMMON PROPERTY
(D)	DENOTES DUCT BEING COMMON PROPERTY
(S)	DENOTES STAIRS BEING COMMON PROPERTY
(EL)	DENOTES ELEVATOR BEING COMMON PROPERTY
(B-1)	DENOTES BALCONY BEING LIMITED COMMON PROPERTY FOR THE EXCLUSIVE USE OF STRATA LOT 1 (TYPICAL)
(RD-420)	DENOTES ROOF DECK BEING LIMITED COMMON PROPERTY FOR THE EXCLUSIVE USE OF STRATA LOT 420 (TYPICAL)

LCP AREAS ARE DEFINED AS TO HEIGHT BY THE CENTRE OF THE FLOOR ABOVE OR ITS EXTENSION OR WHERE THERE IS NO FLOOR ABOVE, BY THE AVERAGE HEIGHT OF A STRATA LOT WITHIN THE SAME BUILDING, UNLESS OTHERWISE NOTED

SECTION ARROWS POINT IN THE DIRECTION OF VIEW

www.BCStrataPlans.com

BUTLER SUNDVICK

JESSE MORIN, BCLS
Date: SEPTEMBER 16, 2022
File: 4772\Strata\Final
Dwg: 4772-FS

STRATA PLAN EPS8443

TOWER 2
LEVEL 5

0 5 10

SCALE 1 : 100 DISTANCES ARE IN METRES

THE INTENDED PLOT SCALE OF THIS PLAN IS 560 mm IN WIDTH BY 432 mm IN HEIGHT (C SIZE) WHEN PLOTTED AT A SCALE OF 1:100.

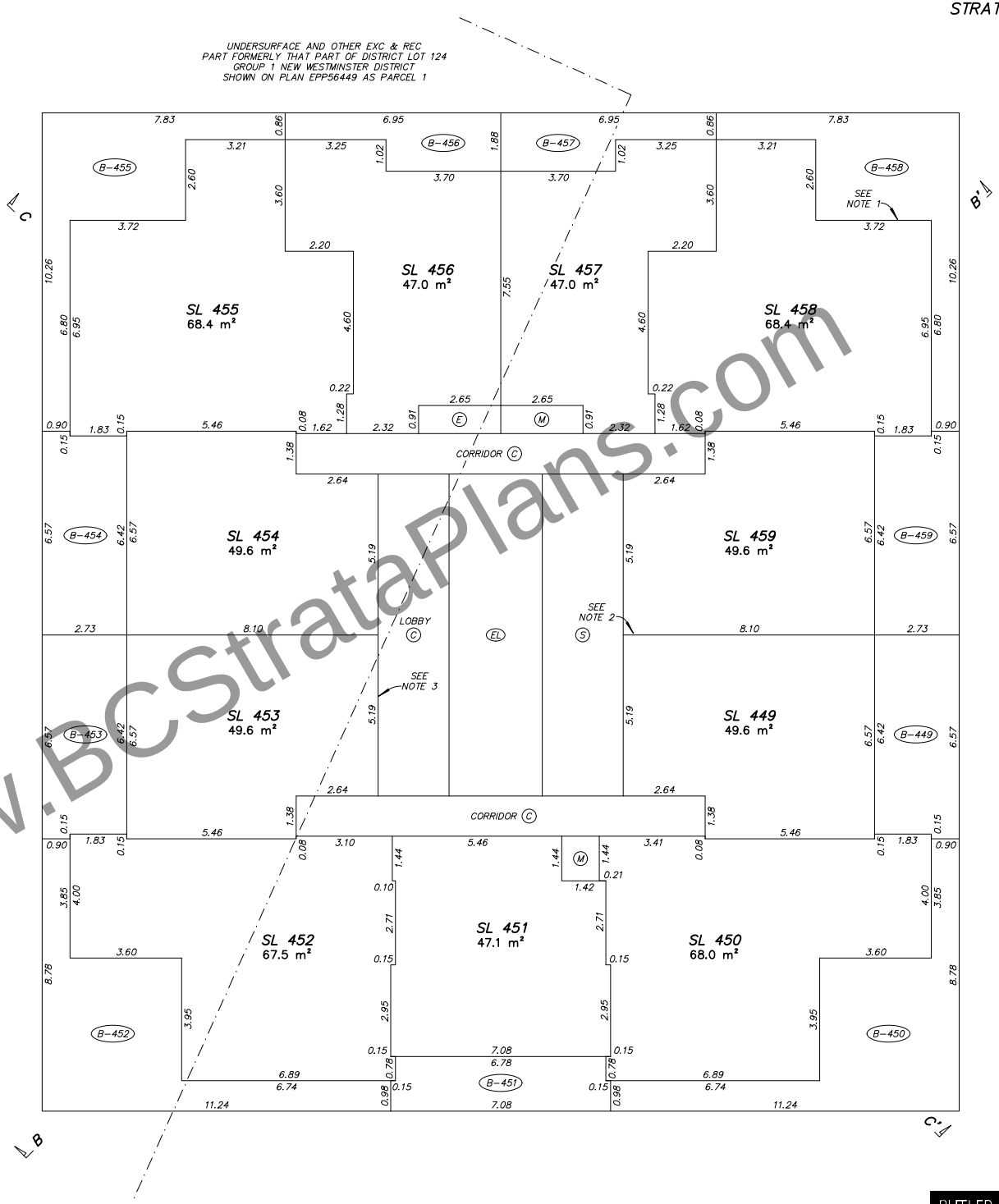

www.BCStrataPlans.com

NOTES:

1. STRATA LOT BOUNDARY EXTERIOR FACE OF EXTERIOR WALLS (TYPICAL)
2. STRATA LOT BOUNDARY CENTRELINE OF DEMISING WALLS BETWEEN STRATA LOTS (TYPICAL)
3. STRATA LOT BOUNDARY EXTERIOR FACE OF WALLS ADJACENT TO COMMON AREAS (TYPICAL)
4. STRATA LOT BOUNDARY CENTRELINE FLOOR/CEILING (TYPICAL)
5. UPPER LIMIT OF LCP IS EXTENSION OF THE CENTRELINE OF THE FLOOR/CEILING ABOVE OR WHERE THERE IS NO FLOOR ABOVE, BY THE AVERAGE HEIGHT OF A STRATA LOT WITHIN THE SAME BUILDING (TYPICAL)

LEGEND

m²	DENOTES SQUARE METRES
SL	DENOTES STRATA LOT
PT	DENOTES PART
T	DENOTES TOTAL
Ex.	DENOTES EXPLANATORY
(C)	DENOTES COMMON PROPERTY
(E)	DENOTES ELECTRICAL ROOM BEING COMMON PROPERTY
(M)	DENOTES MECHANICAL ROOM BEING COMMON PROPERTY
(V)	DENOTES VESTIBULE BEING COMMON PROPERTY
(D)	DENOTES DUCT BEING COMMON PROPERTY
(S)	DENOTES STAIRS BEING COMMON PROPERTY
(EL)	DENOTES ELEVATOR BEING COMMON PROPERTY
(B-1)	DENOTES BALCONY BEING LIMITED COMMON PROPERTY FOR THE EXCLUSIVE USE OF STRATA LOT 1 (TYPICAL)
(RD-420)	DENOTES ROOF DECK BEING LIMITED COMMON PROPERTY FOR THE EXCLUSIVE USE OF STRATA LOT 420 (TYPICAL)

LCP AREAS ARE DEFINED AS TO HEIGHT BY THE CENTRE OF THE FLOOR ABOVE OR ITS EXTENSION OR WHERE THERE IS NO FLOOR ABOVE, BY THE AVERAGE HEIGHT OF A STRATA LOT WITHIN THE SAME BUILDING, UNLESS OTHERWISE NOTED

SECTION ARROWS POINT IN THE DIRECTION OF VIEW

BUTLER SUNDVICK

JESSE MORIN, BCLS
Date: SEPTEMBER 16, 2022
File: 4772\Strata\Final
Dwg: 4772-FS

STRATA PLAN EPS8443

TOWER 2
LEVEL 6

0 5 10

SCALE 1 : 100 DISTANCES ARE IN METRES

THE INTENDED PLOT SCALE OF THIS PLAN IS 560 mm IN WIDTH BY 432 mm IN HEIGHT (C SIZE) WHEN PLOTTED AT A SCALE OF 1:100.

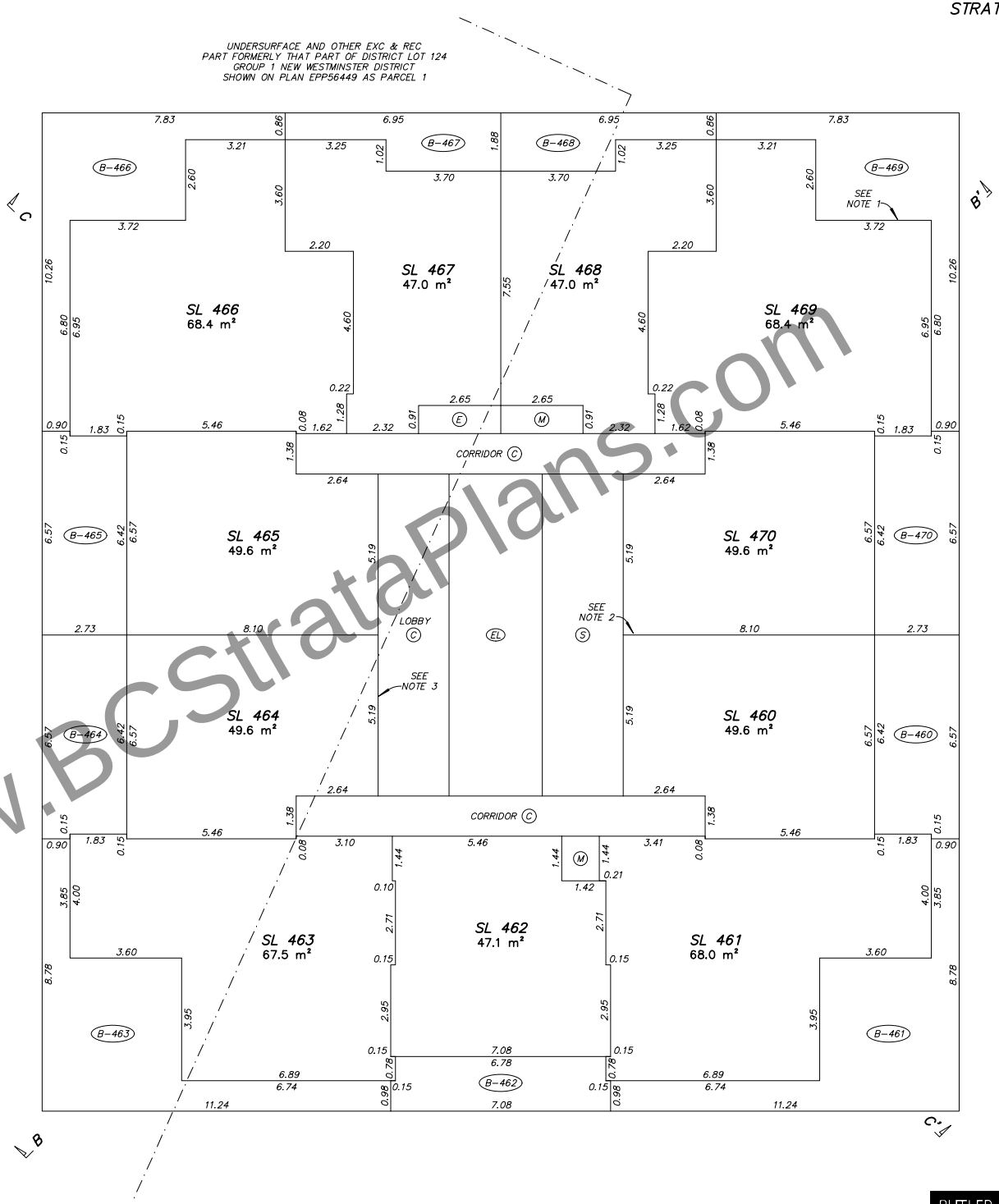

NOTES:

1. STRATA LOT BOUNDARY EXTERIOR FACE OF EXTERIOR WALLS (TYPICAL)
2. STRATA LOT BOUNDARY CENTRELINE OF DEMISING WALLS BETWEEN STRATA LOTS (TYPICAL)
3. STRATA LOT BOUNDARY EXTERIOR FACE OF WALLS ADJACENT TO COMMON AREAS (TYPICAL)
4. STRATA LOT BOUNDARY CENTRELINE FLOOR/CEILING (TYPICAL)
5. UPPER LIMIT OF LCP IS EXTENSION OF THE CENTRELINE OF THE FLOOR/CEILING ABOVE OR WHERE THERE IS NO FLOOR ABOVE, BY THE AVERAGE HEIGHT OF A STRATA LOT WITHIN THE SAME BUILDING (TYPICAL)

LEGEND

m²	DENOTES SQUARE METRES
SL	DENOTES STRATA LOT
PT	DENOTES PART
T	DENOTES TOTAL
Ex.	DENOTES EXPLANATORY
(C)	DENOTES COMMON PROPERTY
(E)	DENOTES ELECTRICAL ROOM BEING COMMON PROPERTY
(M)	DENOTES MECHANICAL ROOM BEING COMMON PROPERTY
(V)	DENOTES VESTIBULE BEING COMMON PROPERTY
(D)	DENOTES DUCT BEING COMMON PROPERTY
(S)	DENOTES STAIRS BEING COMMON PROPERTY
(EL)	DENOTES ELEVATOR BEING COMMON PROPERTY
(B-1)	DENOTES BALCONY BEING LIMITED COMMON PROPERTY FOR THE EXCLUSIVE USE OF STRATA LOT 1 (TYPICAL)
(RD-420)	DENOTES ROOF DECK BEING LIMITED COMMON PROPERTY FOR THE EXCLUSIVE USE OF STRATA LOT 420 (TYPICAL)

LCP AREAS ARE DEFINED AS TO HEIGHT BY THE CENTRE OF THE FLOOR ABOVE OR ITS EXTENSION OR WHERE THERE IS NO FLOOR ABOVE, BY THE AVERAGE HEIGHT OF A STRATA LOT WITHIN THE SAME BUILDING, UNLESS OTHERWISE NOTED

SECTION ARROWS POINT IN THE DIRECTION OF VIEW

www.BCStrataPlans.com

BUTLER SUNDVICK

JESSE MORIN, BCLS
Date: SEPTEMBER 16, 2022
File: 4772\Strata\Final
Dwg: 4772-FS

STRATA PLAN EPS8443

TOWER 2
LEVEL 7

0 5 10

SCALE 1 : 100 DISTANCES ARE IN METRES

THE INTENDED PLOT SCALE OF THIS PLAN IS 560 mm IN WIDTH BY 432 mm IN HEIGHT (C SIZE) WHEN PLOTTED AT A SCALE OF 1:100.

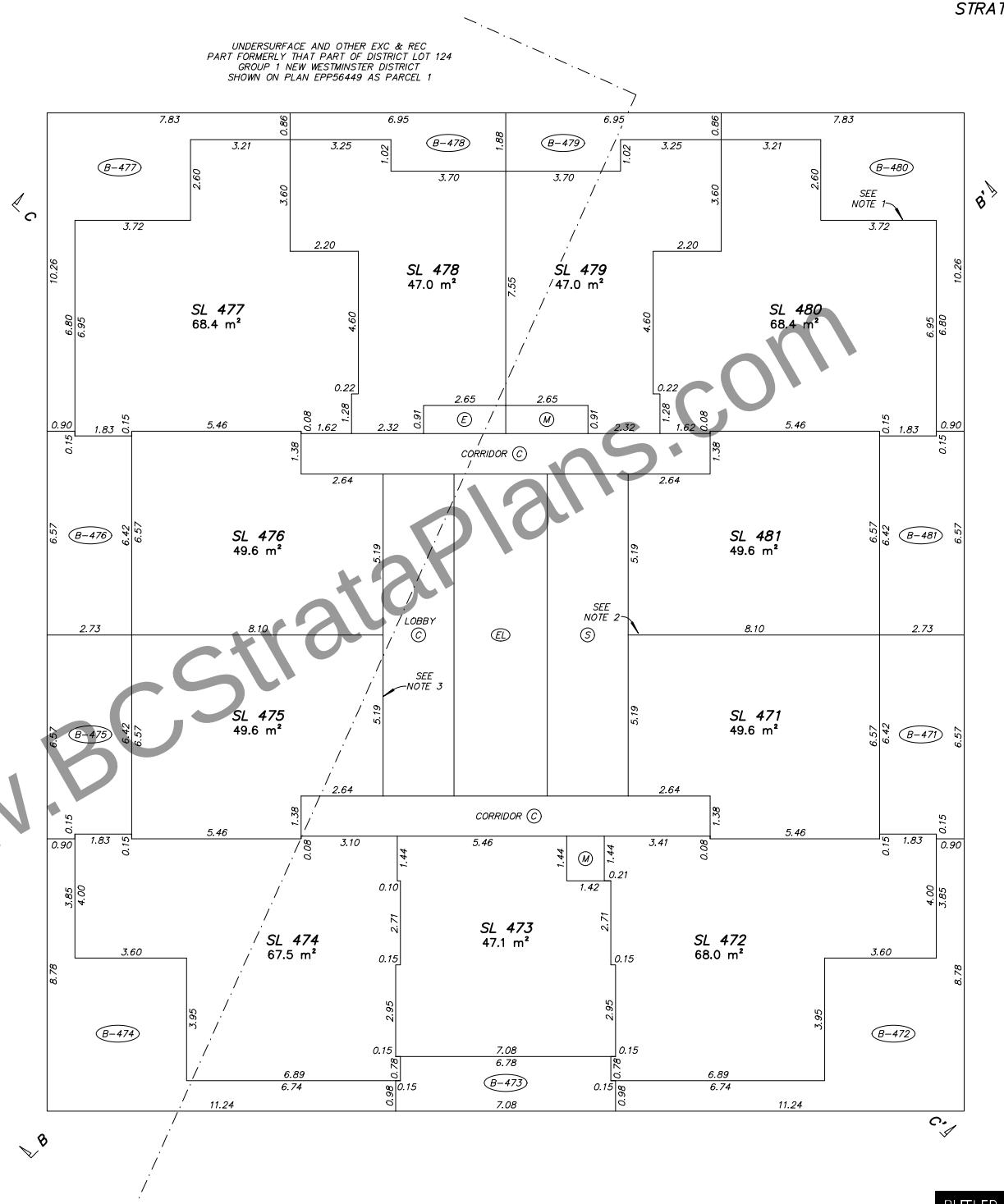

NOTES:

1. STRATA LOT BOUNDARY EXTERIOR FACE OF EXTERIOR WALLS (TYPICAL)
2. STRATA LOT BOUNDARY CENTRELINE OF DEMISING WALLS BETWEEN STRATA LOTS (TYPICAL)
3. STRATA LOT BOUNDARY EXTERIOR FACE OF WALLS ADJACENT TO COMMON AREAS (TYPICAL)
4. STRATA LOT BOUNDARY CENTRELINE FLOOR/CEILING (TYPICAL)
5. UPPER LIMIT OF LCP IS EXTENSION OF THE CENTRELINE OF THE FLOOR/CEILING ABOVE OR WHERE THERE IS NO FLOOR ABOVE, BY THE AVERAGE HEIGHT OF A STRATA LOT WITHIN THE SAME BUILDING (TYPICAL)

LEGEND

m²	DENOTES SQUARE METRES
SL	DENOTES STRATA LOT
PT	DENOTES PART
T	DENOTES TOTAL
Ex.	DENOTES EXPLANATORY
(C)	DENOTES COMMON PROPERTY
(E)	DENOTES ELECTRICAL ROOM BEING COMMON PROPERTY
(M)	DENOTES MECHANICAL ROOM BEING COMMON PROPERTY
(V)	DENOTES VESTIBULE BEING COMMON PROPERTY
(D)	DENOTES DUCT BEING COMMON PROPERTY
(S)	DENOTES STAIRS BEING COMMON PROPERTY
(EL)	DENOTES ELEVATOR BEING COMMON PROPERTY
(B-1)	DENOTES BALCONY BEING LIMITED COMMON PROPERTY FOR THE EXCLUSIVE USE OF STRATA LOT 1 (TYPICAL)
(RD-420)	DENOTES ROOF DECK BEING LIMITED COMMON PROPERTY FOR THE EXCLUSIVE USE OF STRATA LOT 420 (TYPICAL)

LCP AREAS ARE DEFINED AS TO HEIGHT BY THE CENTRE OF THE FLOOR ABOVE OR ITS EXTENSION OR WHERE THERE IS NO FLOOR ABOVE, BY THE AVERAGE HEIGHT OF A STRATA LOT WITHIN THE SAME BUILDING, UNLESS OTHERWISE NOTED

SECTION ARROWS POINT IN THE DIRECTION OF VIEW

www.BCStrataPlans.com

BUTLER SUNDVICK

JESSE MORIN, BCLS
Date: SEPTEMBER 16, 2022
File: 4772\Strata\Final
Dwg: 4772-FS

STRATA PLAN EPS8443

TOWER 2
LEVEL 8

0 5 10

SCALE 1 : 100 DISTANCES ARE IN METRES

THE INTENDED PLOT SCALE OF THIS PLAN IS 560 mm IN WIDTH BY 432 mm IN HEIGHT (C SIZE) WHEN PLOTTED AT A SCALE OF 1:100.

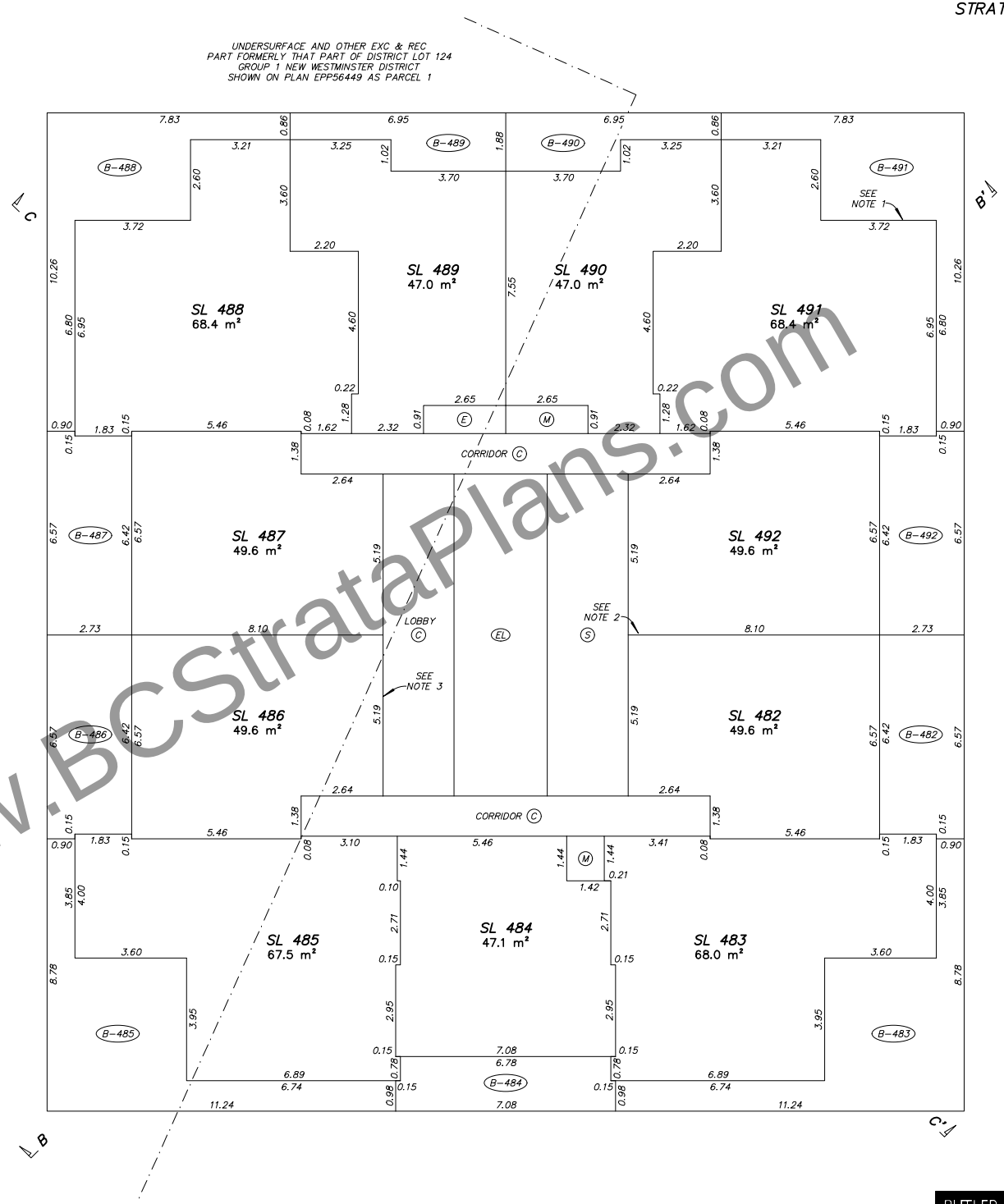

NOTES:

1. STRATA LOT BOUNDARY EXTERIOR FACE OF EXTERIOR WALLS (TYPICAL)
2. STRATA LOT BOUNDARY CENTRELINE OF DEMISING WALLS BETWEEN STRATA LOTS (TYPICAL)
3. STRATA LOT BOUNDARY EXTERIOR FACE OF WALLS ADJACENT TO COMMON AREAS (TYPICAL)
4. STRATA LOT BOUNDARY CENTRELINE FLOOR/CEILING (TYPICAL)
5. UPPER LIMIT OF LCP IS EXTENSION OF THE CENTRELINE OF THE FLOOR/CEILING ABOVE OR WHERE THERE IS NO FLOOR ABOVE, BY THE AVERAGE HEIGHT OF A STRATA LOT WITHIN THE SAME BUILDING (TYPICAL)

LEGEND

m²	DENOTES SQUARE METRES
SL	DENOTES STRATA LOT
PT	DENOTES PART
T	DENOTES TOTAL
Ex.	DENOTES EXPLANATORY
(C)	DENOTES COMMON PROPERTY
(E)	DENOTES ELECTRICAL ROOM BEING COMMON PROPERTY
(M)	DENOTES MECHANICAL ROOM BEING COMMON PROPERTY
(V)	DENOTES VESTIBULE BEING COMMON PROPERTY
(D)	DENOTES DUCT BEING COMMON PROPERTY
(S)	DENOTES STAIRS BEING COMMON PROPERTY
(EL)	DENOTES ELEVATOR BEING COMMON PROPERTY
(B-1)	DENOTES BALCONY BEING LIMITED COMMON PROPERTY FOR THE EXCLUSIVE USE OF STRATA LOT 1 (TYPICAL)
(RD-420)	DENOTES ROOF DECK BEING LIMITED COMMON PROPERTY FOR THE EXCLUSIVE USE OF STRATA LOT 420 (TYPICAL)

LCP AREAS ARE DEFINED AS TO HEIGHT BY THE CENTRE OF THE FLOOR ABOVE OR ITS EXTENSION OR WHERE THERE IS NO FLOOR ABOVE, BY THE AVERAGE HEIGHT OF A STRATA LOT WITHIN THE SAME BUILDING, UNLESS OTHERWISE NOTED

SECTION ARROWS POINT IN THE DIRECTION OF VIEW

www.BCStrataPlans.com

BUTLER SUNDVICK

JESSE MORIN, BCLS
Date: SEPTEMBER 16, 2022
File: 4772\Strata\Final
Dwg: 4772-FS

STRATA PLAN EPS8443

TOWER 2
LEVEL 9

0 5 10

SCALE 1 : 100 DISTANCES ARE IN METRES

THE INTENDED PLOT SCALE OF THIS PLAN IS 560 mm IN WIDTH BY 432 mm IN HEIGHT (C SIZE) WHEN PLOTTED AT A SCALE OF 1:100.

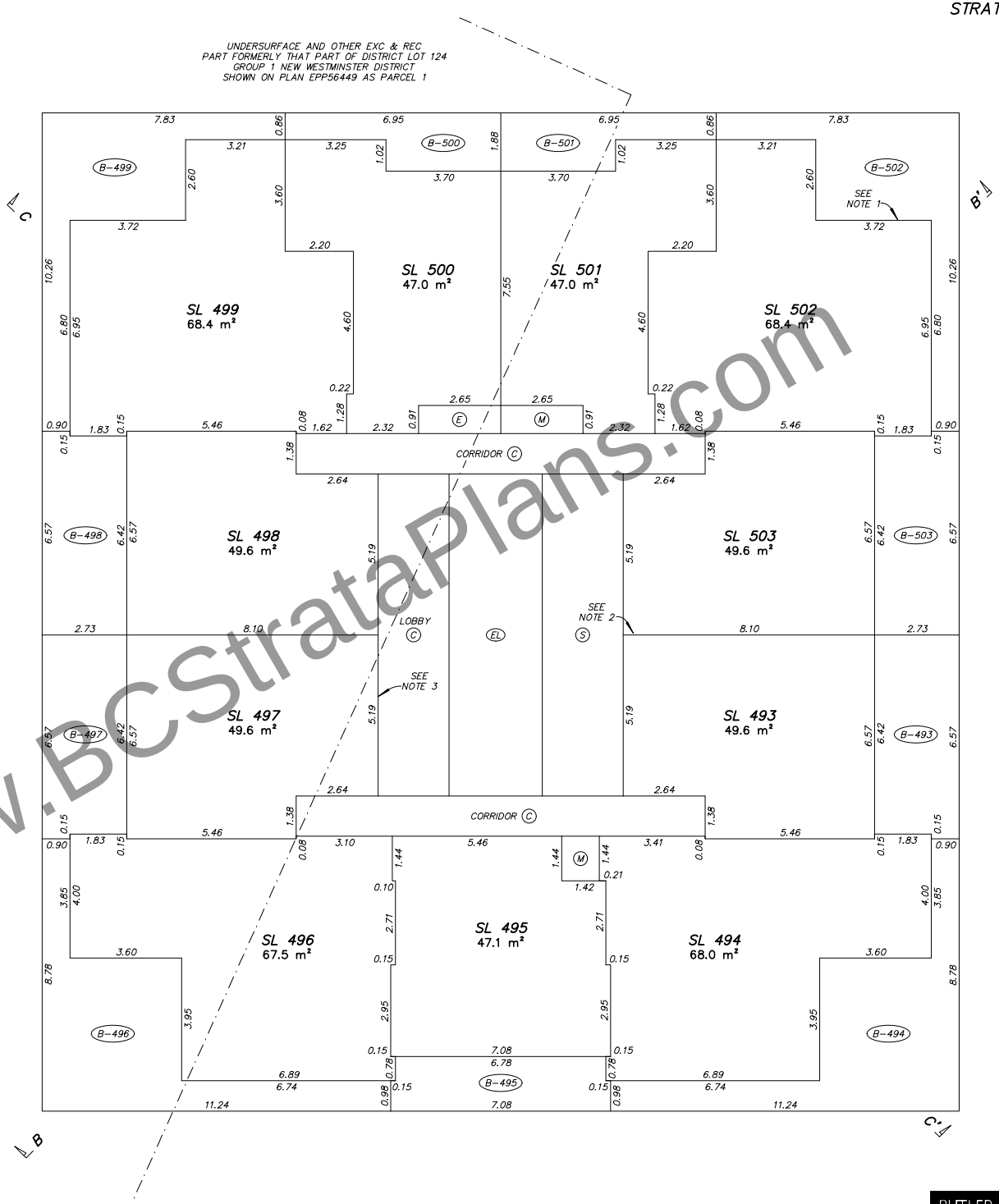

NOTES:

1. STRATA LOT BOUNDARY EXTERIOR FACE OF EXTERIOR WALLS (TYPICAL)
2. STRATA LOT BOUNDARY CENTRELINE OF DEMISING WALLS BETWEEN STRATA LOTS (TYPICAL)
3. STRATA LOT BOUNDARY EXTERIOR FACE OF WALLS ADJACENT TO COMMON AREAS (TYPICAL)
4. STRATA LOT BOUNDARY CENTRELINE FLOOR/CEILING (TYPICAL)
5. UPPER LIMIT OF LCP IS EXTENSION OF THE CENTRELINE OF THE FLOOR/CEILING ABOVE OR WHERE THERE IS NO FLOOR ABOVE, BY THE AVERAGE HEIGHT OF A STRATA LOT WITHIN THE SAME BUILDING (TYPICAL)

LEGEND

m²	DENOTES SQUARE METRES
SL	DENOTES STRATA LOT
PT	DENOTES PART
T	DENOTES TOTAL
Ex.	DENOTES EXPLANATORY
(C)	DENOTES COMMON PROPERTY
(E)	DENOTES ELECTRICAL ROOM BEING COMMON PROPERTY
(M)	DENOTES MECHANICAL ROOM BEING COMMON PROPERTY
(V)	DENOTES VESTIBULE BEING COMMON PROPERTY
(D)	DENOTES DUCT BEING COMMON PROPERTY
(S)	DENOTES STAIRS BEING COMMON PROPERTY
(EL)	DENOTES ELEVATOR BEING COMMON PROPERTY
(B-1)	DENOTES BALCONY BEING LIMITED COMMON PROPERTY FOR THE EXCLUSIVE USE OF STRATA LOT 1 (TYPICAL)
(RD-420)	DENOTES ROOF DECK BEING LIMITED COMMON PROPERTY FOR THE EXCLUSIVE USE OF STRATA LOT 420 (TYPICAL)

LCP AREAS ARE DEFINED AS TO HEIGHT BY THE CENTRE OF THE FLOOR ABOVE OR ITS EXTENSION OR WHERE THERE IS NO FLOOR ABOVE, BY THE AVERAGE HEIGHT OF A STRATA LOT WITHIN THE SAME BUILDING, UNLESS OTHERWISE NOTED

SECTION ARROWS POINT IN THE DIRECTION OF VIEW

www.BCStrataPlans.com

BUTLER SUNDVICK

JESSE MORIN, BCLS
Date: SEPTEMBER 16, 2022
File: 4772\Strata\Final
Dwg: 4772-FS

STRATA PLAN EPS8443

TOWER 2
LEVEL 10

0 5 10

SCALE 1 : 100 DISTANCES ARE IN METRES

THE INTENDED PLOT SCALE OF THIS PLAN IS 560 mm IN WIDTH BY 432 mm IN HEIGHT (C SIZE) WHEN PLOTTED AT A SCALE OF 1:100.

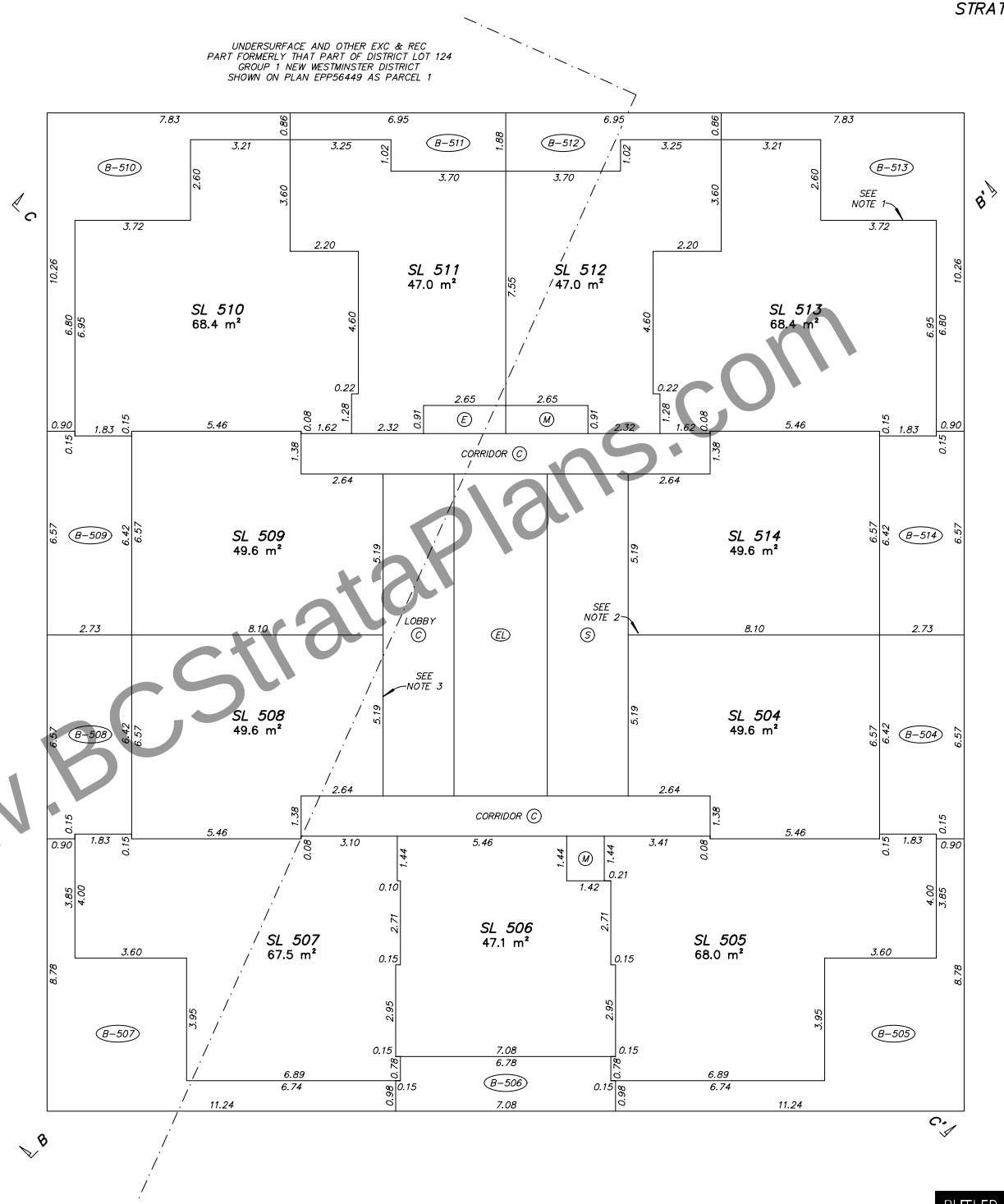

www.BCStrataPlans.com

NOTES:

1. STRATA LOT BOUNDARY EXTERIOR FACE OF EXTERIOR WALLS (TYPICAL)
2. STRATA LOT BOUNDARY CENTRELINE OF DEMISING WALLS BETWEEN STRATA LOTS (TYPICAL)
3. STRATA LOT BOUNDARY EXTERIOR FACE OF WALLS ADJACENT TO COMMON AREAS (TYPICAL)
4. STRATA LOT BOUNDARY CENTRELINE FLOOR/CEILING (TYPICAL)
5. UPPER LIMIT OF LCP IS EXTENSION OF THE CENTRELINE OF THE FLOOR/CEILING ABOVE OR WHERE THERE IS NO FLOOR ABOVE, BY THE AVERAGE HEIGHT OF A STRATA LOT WITHIN THE SAME BUILDING (TYPICAL)

LEGEND

m²	DENOTES SQUARE METRES
SL	DENOTES STRATA LOT
PT	DENOTES PART
T	DENOTES TOTAL
Ex.	DENOTES EXPLANATORY
(C)	DENOTES COMMON PROPERTY
(E)	DENOTES ELECTRICAL ROOM BEING COMMON PROPERTY
(M)	DENOTES MECHANICAL ROOM BEING COMMON PROPERTY
(V)	DENOTES VESTIBULE BEING COMMON PROPERTY
(D)	DENOTES DUCT BEING COMMON PROPERTY
(S)	DENOTES STAIRS BEING COMMON PROPERTY
(EL)	DENOTES ELEVATOR BEING COMMON PROPERTY
(B-1)	DENOTES BALCONY BEING LIMITED COMMON PROPERTY FOR THE EXCLUSIVE USE OF STRATA LOT 1 (TYPICAL)
(RD-420)	DENOTES ROOF DECK BEING LIMITED COMMON PROPERTY FOR THE EXCLUSIVE USE OF STRATA LOT 420 (TYPICAL)

LCP AREAS ARE DEFINED AS TO HEIGHT BY THE CENTRE OF THE FLOOR ABOVE OR ITS EXTENSION OR WHERE THERE IS NO FLOOR ABOVE, BY THE AVERAGE HEIGHT OF A STRATA LOT WITHIN THE SAME BUILDING, UNLESS OTHERWISE NOTED

SECTION ARROWS POINT IN THE DIRECTION OF VIEW

BUTLER SUNDVICK

JESSE MORIN, BCLS
Date: SEPTEMBER 16, 2022
File: 4772\Strata\Final
Dwg: 4772-FS

STRATA PLAN EPS8443

TOWER 2
LEVEL 11

0 5 10

SCALE 1 : 100 DISTANCES ARE IN METRES

THE INTENDED PLOT SCALE OF THIS PLAN IS 560 mm IN WIDTH BY 432 mm IN HEIGHT (C SIZE) WHEN PLOTTED AT A SCALE OF 1:100.

UNDERSURFACE AND OTHER EXC & REC
PART FORMERLY THAT PART OF DISTRICT LOT 124
GROUP 1 NEW WESTMINSTER DISTRICT
SHOWN ON PLAN EPP56449 AS PARCEL 1

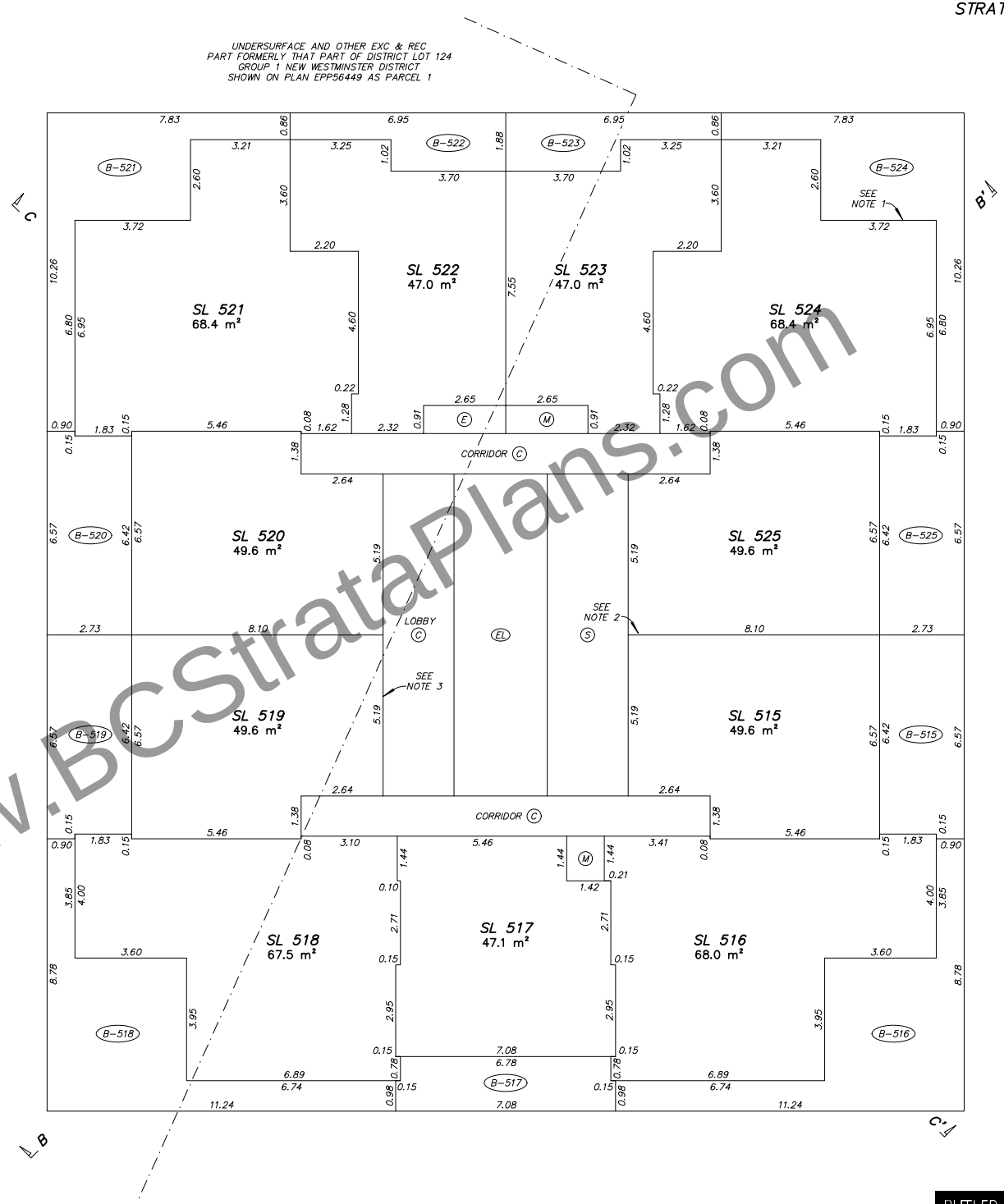

NOTES:

1. STRATA LOT BOUNDARY EXTERIOR FACE OF EXTERIOR WALLS (TYPICAL)
2. STRATA LOT BOUNDARY CENTRELINE OF DEMISING WALLS BETWEEN STRATA LOTS (TYPICAL)
3. STRATA LOT BOUNDARY EXTERIOR FACE OF WALLS ADJACENT TO COMMON AREAS (TYPICAL)
4. STRATA LOT BOUNDARY CENTRELINE FLOOR/CEILING (TYPICAL)
5. UPPER LIMIT OF LCP IS EXTENSION OF THE CENTRELINE OF THE FLOOR/CEILING ABOVE OR WHERE THERE IS NO FLOOR ABOVE, BY THE AVERAGE HEIGHT OF A STRATA LOT WITHIN THE SAME BUILDING (TYPICAL)

LEGEND

m²	DENOTES SQUARE METRES
SL	DENOTES STRATA LOT
PT	DENOTES PART
T	DENOTES TOTAL
Ex.	DENOTES EXPLANATORY
(C)	DENOTES COMMON PROPERTY
(E)	DENOTES ELECTRICAL ROOM BEING COMMON PROPERTY
(M)	DENOTES MECHANICAL ROOM BEING COMMON PROPERTY
(V)	DENOTES VESTIBULE BEING COMMON PROPERTY
(D)	DENOTES DUCT BEING COMMON PROPERTY
(S)	DENOTES STAIRS BEING COMMON PROPERTY
(EL)	DENOTES ELEVATOR BEING COMMON PROPERTY
(B-1)	DENOTES BALCONY BEING LIMITED COMMON PROPERTY FOR THE EXCLUSIVE USE OF STRATA LOT 1 (TYPICAL)
(RD-420)	DENOTES ROOF DECK BEING LIMITED COMMON PROPERTY FOR THE EXCLUSIVE USE OF STRATA LOT 420 (TYPICAL)

LCP AREAS ARE DEFINED AS TO HEIGHT BY THE CENTRE OF THE FLOOR ABOVE OR ITS EXTENSION OR WHERE THERE IS NO FLOOR ABOVE, BY THE AVERAGE HEIGHT OF A STRATA LOT WITHIN THE SAME BUILDING, UNLESS OTHERWISE NOTED

SECTION ARROWS POINT IN THE DIRECTION OF VIEW

www.BCStrataPlans.com

BUTLER SUNDVICK

JESSE MORIN, BCLS
Date: SEPTEMBER 16, 2022
File: 4772\Strata\Final
Dwg: 4772-FS

STRATA PLAN EPS8443

TOWER 2
LEVEL 12

0 5 10

SCALE 1 : 100 DISTANCES ARE IN METRES

THE INTENDED PLOT SCALE OF THIS PLAN IS 560 mm IN WIDTH BY 432 mm IN HEIGHT (C SIZE) WHEN PLOTTED AT A SCALE OF 1:100.

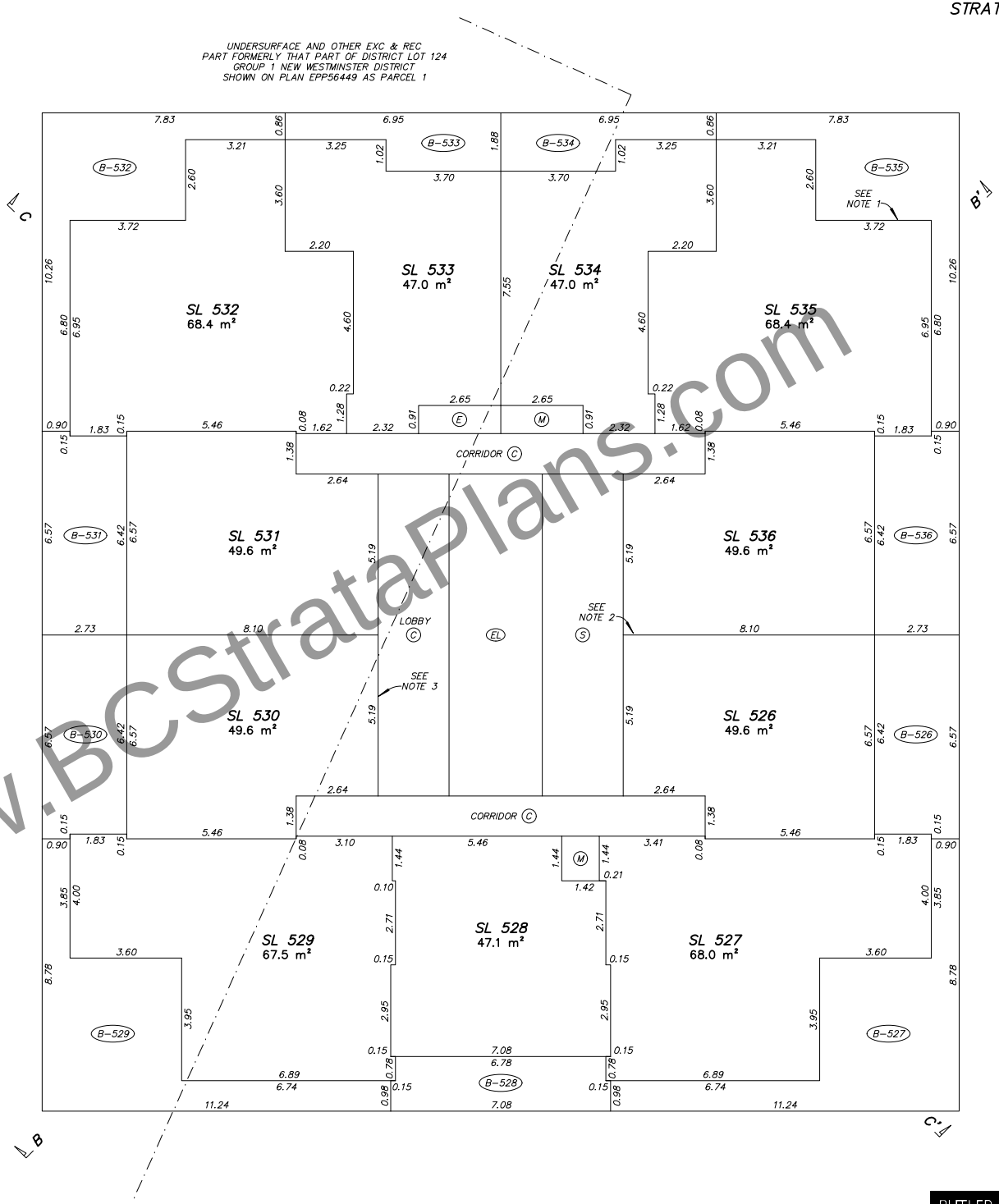

NOTES:

1. STRATA LOT BOUNDARY EXTERIOR FACE OF EXTERIOR WALLS (TYPICAL)
2. STRATA LOT BOUNDARY CENTRELINE OF DEMISING WALLS BETWEEN STRATA LOTS (TYPICAL)
3. STRATA LOT BOUNDARY EXTERIOR FACE OF WALLS ADJACENT TO COMMON AREAS (TYPICAL)
4. STRATA LOT BOUNDARY CENTRELINE FLOOR/CEILING (TYPICAL)
5. UPPER LIMIT OF LCP IS EXTENSION OF THE CENTRELINE OF THE FLOOR/CEILING ABOVE OR WHERE THERE IS NO FLOOR ABOVE, BY THE AVERAGE HEIGHT OF A STRATA LOT WITHIN THE SAME BUILDING (TYPICAL)

LEGEND

m²	DENOTES SQUARE METRES
SL	DENOTES STRATA LOT
PT	DENOTES PART
T	DENOTES TOTAL
Ex.	DENOTES EXPLANATORY
(C)	DENOTES COMMON PROPERTY
(E)	DENOTES ELECTRICAL ROOM BEING COMMON PROPERTY
(M)	DENOTES MECHANICAL ROOM BEING COMMON PROPERTY
(V)	DENOTES VESTIBULE BEING COMMON PROPERTY
(D)	DENOTES DUCT BEING COMMON PROPERTY
(S)	DENOTES STAIRS BEING COMMON PROPERTY
(EL)	DENOTES ELEVATOR BEING COMMON PROPERTY
(B-1)	DENOTES BALCONY BEING LIMITED COMMON PROPERTY FOR THE EXCLUSIVE USE OF STRATA LOT 1 (TYPICAL)
(RD-420)	DENOTES ROOF DECK BEING LIMITED COMMON PROPERTY FOR THE EXCLUSIVE USE OF STRATA LOT 420 (TYPICAL)

LCP AREAS ARE DEFINED AS TO HEIGHT BY THE CENTRE OF THE FLOOR ABOVE OR ITS EXTENSION OR WHERE THERE IS NO FLOOR ABOVE, BY THE AVERAGE HEIGHT OF A STRATA LOT WITHIN THE SAME BUILDING, UNLESS OTHERWISE NOTED

SECTION ARROWS POINT IN THE DIRECTION OF VIEW

www.BCStrataPlans.com

BUTLER SUNDVICK

JESSE MORIN, BCLS
Date: SEPTEMBER 16, 2022
File: 4772\Strata\Final
Dwg: 4772-FS

STRATA PLAN EPS8443

TOWER 2
LEVEL 13

0 5 10

SCALE 1 : 100 DISTANCES ARE IN METRES

THE INTENDED PLOT SCALE OF THIS PLAN IS 560 mm IN WIDTH BY 432 mm IN HEIGHT (C SIZE) WHEN PLOTTED AT A SCALE OF 1:100.

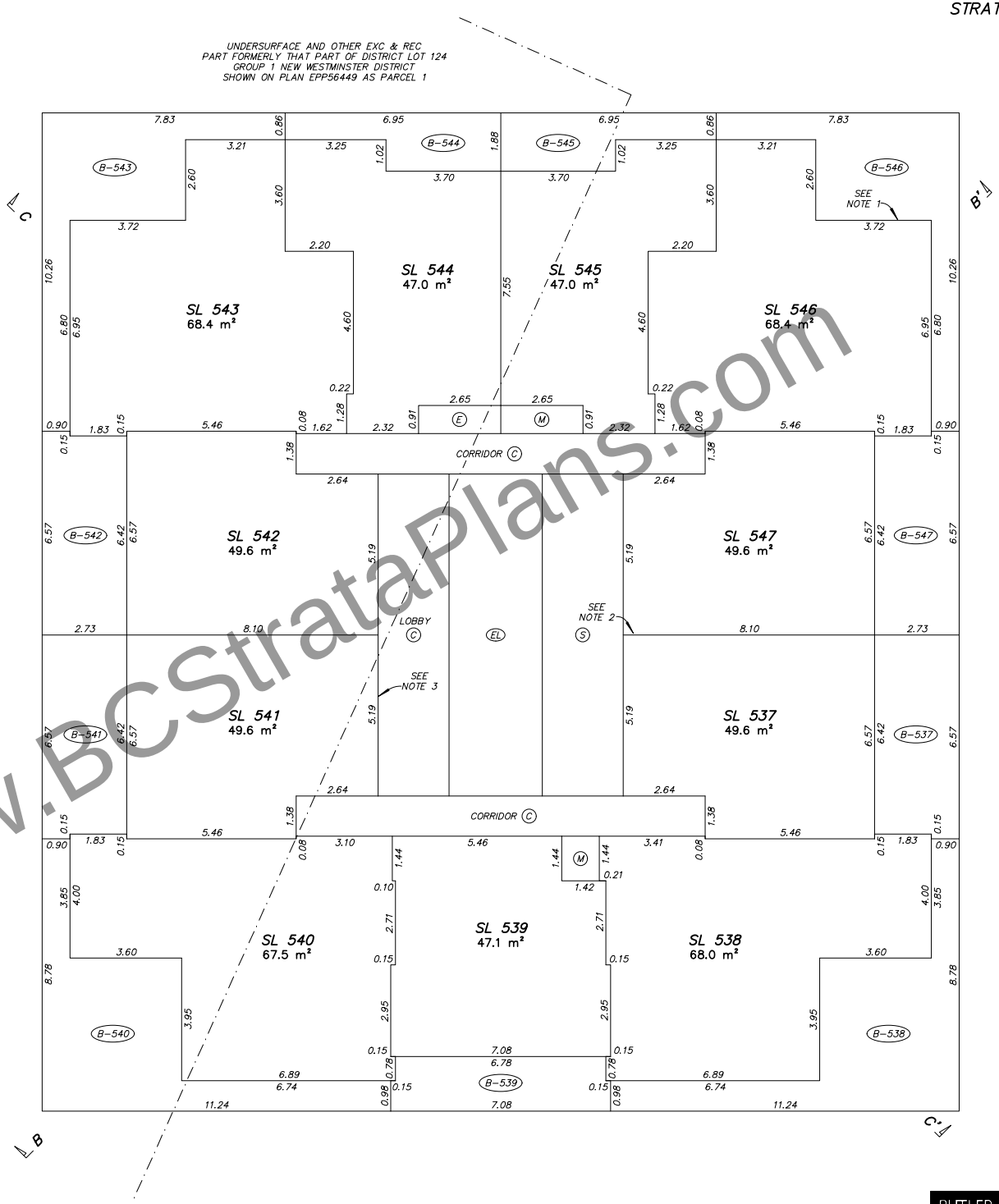

NOTES:

1. STRATA LOT BOUNDARY EXTERIOR FACE OF EXTERIOR WALLS (TYPICAL)
2. STRATA LOT BOUNDARY CENTRELINE OF DEMISING WALLS BETWEEN STRATA LOTS (TYPICAL)
3. STRATA LOT BOUNDARY EXTERIOR FACE OF WALLS ADJACENT TO COMMON AREAS (TYPICAL)
4. STRATA LOT BOUNDARY CENTRELINE FLOOR/CEILING (TYPICAL)
5. UPPER LIMIT OF LCP IS EXTENSION OF THE CENTRELINE OF THE FLOOR/CEILING ABOVE OR WHERE THERE IS NO FLOOR ABOVE, BY THE AVERAGE HEIGHT OF A STRATA LOT WITHIN THE SAME BUILDING (TYPICAL)

LEGEND

m²	DENOTES SQUARE METRES
SL	DENOTES STRATA LOT
PT	DENOTES PART
T	DENOTES TOTAL
Ex.	DENOTES EXPLANATORY
(C)	DENOTES COMMON PROPERTY
(E)	DENOTES ELECTRICAL ROOM BEING COMMON PROPERTY
(M)	DENOTES MECHANICAL ROOM BEING COMMON PROPERTY
(V)	DENOTES VESTIBULE BEING COMMON PROPERTY
(D)	DENOTES DUCT BEING COMMON PROPERTY
(S)	DENOTES STAIRS BEING COMMON PROPERTY
(EL)	DENOTES ELEVATOR BEING COMMON PROPERTY
(B-1)	DENOTES BALCONY BEING LIMITED COMMON PROPERTY FOR THE EXCLUSIVE USE OF STRATA LOT 1 (TYPICAL)
(RD-420)	DENOTES ROOF DECK BEING LIMITED COMMON PROPERTY FOR THE EXCLUSIVE USE OF STRATA LOT 420 (TYPICAL)

LCP AREAS ARE DEFINED AS TO HEIGHT BY THE CENTRE OF THE FLOOR ABOVE OR ITS EXTENSION OR WHERE THERE IS NO FLOOR ABOVE, BY THE AVERAGE HEIGHT OF A STRATA LOT WITHIN THE SAME BUILDING, UNLESS OTHERWISE NOTED

SECTION ARROWS POINT IN THE DIRECTION OF VIEW

www.BCStrataPlans.com

BUTLER SUNDVICK

JESSE MORIN, BCLS
Date: SEPTEMBER 16, 2022
File: 4772\Strata\Final
Dwg: 4772-FS

STRATA PLAN EPS8443

TOWER 2
LEVEL 14

0 5 10

SCALE 1 : 100 DISTANCES ARE IN METRES

THE INTENDED PLOT SCALE OF THIS PLAN IS 560 mm IN WIDTH BY 432 mm IN HEIGHT (C SIZE) WHEN PLOTTED AT A SCALE OF 1:100.

UNDERSURFACE AND OTHER EXC & REC
PART FORMERLY THAT PART OF DISTRICT LOT 124
GROUP 1 NEW WESTMINSTER DISTRICT
SHOWN ON PLAN EPP56449 AS PARCEL 1

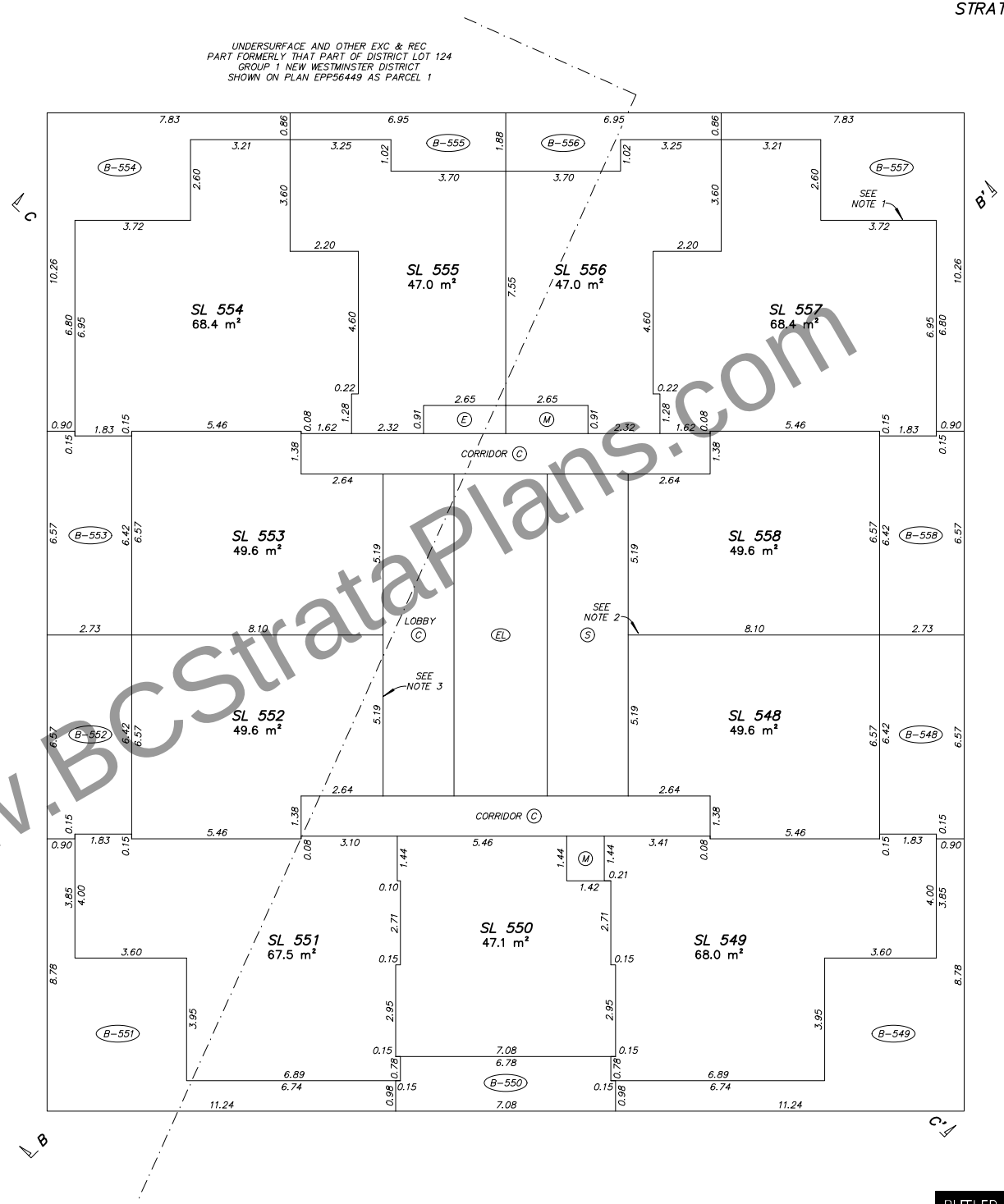

NOTES:

1. STRATA LOT BOUNDARY EXTERIOR FACE OF EXTERIOR WALLS (TYPICAL)
2. STRATA LOT BOUNDARY CENTRELINE OF DEMISING WALLS BETWEEN STRATA LOTS (TYPICAL)
3. STRATA LOT BOUNDARY EXTERIOR FACE OF WALLS ADJACENT TO COMMON AREAS (TYPICAL)
4. STRATA LOT BOUNDARY CENTRELINE FLOOR/CEILING (TYPICAL)
5. UPPER LIMIT OF LCP IS EXTENSION OF THE CENTRELINE OF THE FLOOR/CEILING ABOVE OR WHERE THERE IS NO FLOOR ABOVE, BY THE AVERAGE HEIGHT OF A STRATA LOT WITHIN THE SAME BUILDING (TYPICAL)

LEGEND

m²	DENOTES SQUARE METRES
SL	DENOTES STRATA LOT
PT	DENOTES PART
T	DENOTES TOTAL
Ex.	DENOTES EXPLANATORY
(C)	DENOTES COMMON PROPERTY
(E)	DENOTES ELECTRICAL ROOM BEING COMMON PROPERTY
(M)	DENOTES MECHANICAL ROOM BEING COMMON PROPERTY
(V)	DENOTES VESTIBULE BEING COMMON PROPERTY
(D)	DENOTES DUCT BEING COMMON PROPERTY
(S)	DENOTES STAIRS BEING COMMON PROPERTY
(EL)	DENOTES ELEVATOR BEING COMMON PROPERTY
(B-1)	DENOTES BALCONY BEING LIMITED COMMON PROPERTY FOR THE EXCLUSIVE USE OF STRATA LOT 1 (TYPICAL)
(RD-420)	DENOTES ROOF DECK BEING LIMITED COMMON PROPERTY FOR THE EXCLUSIVE USE OF STRATA LOT 420 (TYPICAL)

LCP AREAS ARE DEFINED AS TO HEIGHT BY THE CENTRE OF THE FLOOR ABOVE OR ITS EXTENSION OR WHERE THERE IS NO FLOOR ABOVE, BY THE AVERAGE HEIGHT OF A STRATA LOT WITHIN THE SAME BUILDING, UNLESS OTHERWISE NOTED

SECTION ARROWS POINT IN THE DIRECTION OF VIEW

www.BCStrataPlans.com

BUTLER SUNDVICK

JESSE MORIN, BCLS
Date: SEPTEMBER 16, 2022
File: 4772\Strata\Final
Dwg: 4772-FS

STRATA PLAN EPS8443

TOWER 2
LEVEL 15

0 5 10

SCALE 1 : 100 DISTANCES ARE IN METRES

THE INTENDED PLOT SCALE OF THIS PLAN IS 560 mm IN WIDTH BY 432 mm IN HEIGHT (C SIZE) WHEN PLOTTED AT A SCALE OF 1:100.

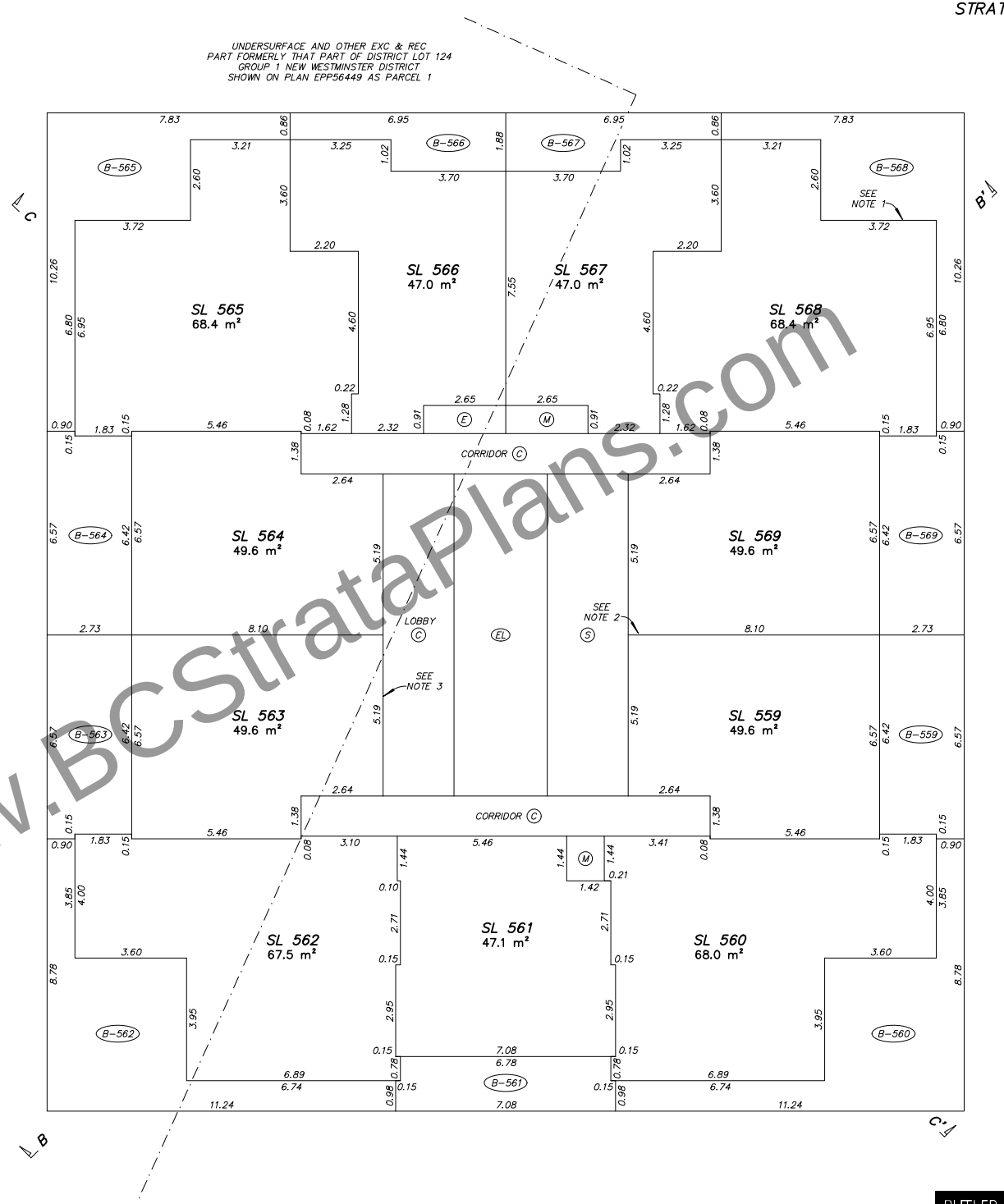

NOTES:

1. STRATA LOT BOUNDARY EXTERIOR FACE OF EXTERIOR WALLS (TYPICAL)
2. STRATA LOT BOUNDARY CENTRELINE OF DEMISING WALLS BETWEEN STRATA LOTS (TYPICAL)
3. STRATA LOT BOUNDARY EXTERIOR FACE OF WALLS ADJACENT TO COMMON AREAS (TYPICAL)
4. STRATA LOT BOUNDARY CENTRELINE FLOOR/CEILING (TYPICAL)
5. UPPER LIMIT OF LCP IS EXTENSION OF THE CENTRELINE OF THE FLOOR/CEILING ABOVE OR WHERE THERE IS NO FLOOR ABOVE, BY THE AVERAGE HEIGHT OF A STRATA LOT WITHIN THE SAME BUILDING (TYPICAL)

LEGEND

m²	DENOTES SQUARE METRES
SL	DENOTES STRATA LOT
PT	DENOTES PART
T	DENOTES TOTAL
Ex.	DENOTES EXPLANATORY
(C)	DENOTES COMMON PROPERTY
(E)	DENOTES ELECTRICAL ROOM BEING COMMON PROPERTY
(M)	DENOTES MECHANICAL ROOM BEING COMMON PROPERTY
(V)	DENOTES VESTIBULE BEING COMMON PROPERTY
(D)	DENOTES DUCT BEING COMMON PROPERTY
(S)	DENOTES STAIRS BEING COMMON PROPERTY
(EL)	DENOTES ELEVATOR BEING COMMON PROPERTY
(B-1)	DENOTES BALCONY BEING LIMITED COMMON PROPERTY FOR THE EXCLUSIVE USE OF STRATA LOT 1 (TYPICAL)
(RD-420)	DENOTES ROOF DECK BEING LIMITED COMMON PROPERTY FOR THE EXCLUSIVE USE OF STRATA LOT 420 (TYPICAL)

LCP AREAS ARE DEFINED AS TO HEIGHT BY THE CENTRE OF THE FLOOR ABOVE OR ITS EXTENSION OR WHERE THERE IS NO FLOOR ABOVE, BY THE AVERAGE HEIGHT OF A STRATA LOT WITHIN THE SAME BUILDING, UNLESS OTHERWISE NOTED

SECTION ARROWS POINT IN THE DIRECTION OF VIEW

www.BCStrataPlans.com

BUTLER SUNDVICK

JESSE MORIN, BCLS
Date: SEPTEMBER 16, 2022
File: 4772\Strata\Final
Dwg: 4772-FS

STRATA PLAN EPS8443

TOWER 2
LEVEL 16

0 5 10

SCALE 1 : 100 DISTANCES ARE IN METRES

THE INTENDED PLOT SCALE OF THIS PLAN IS 560 mm IN WIDTH BY 432 mm IN HEIGHT (C SIZE) WHEN PLOTTED AT A SCALE OF 1:100.

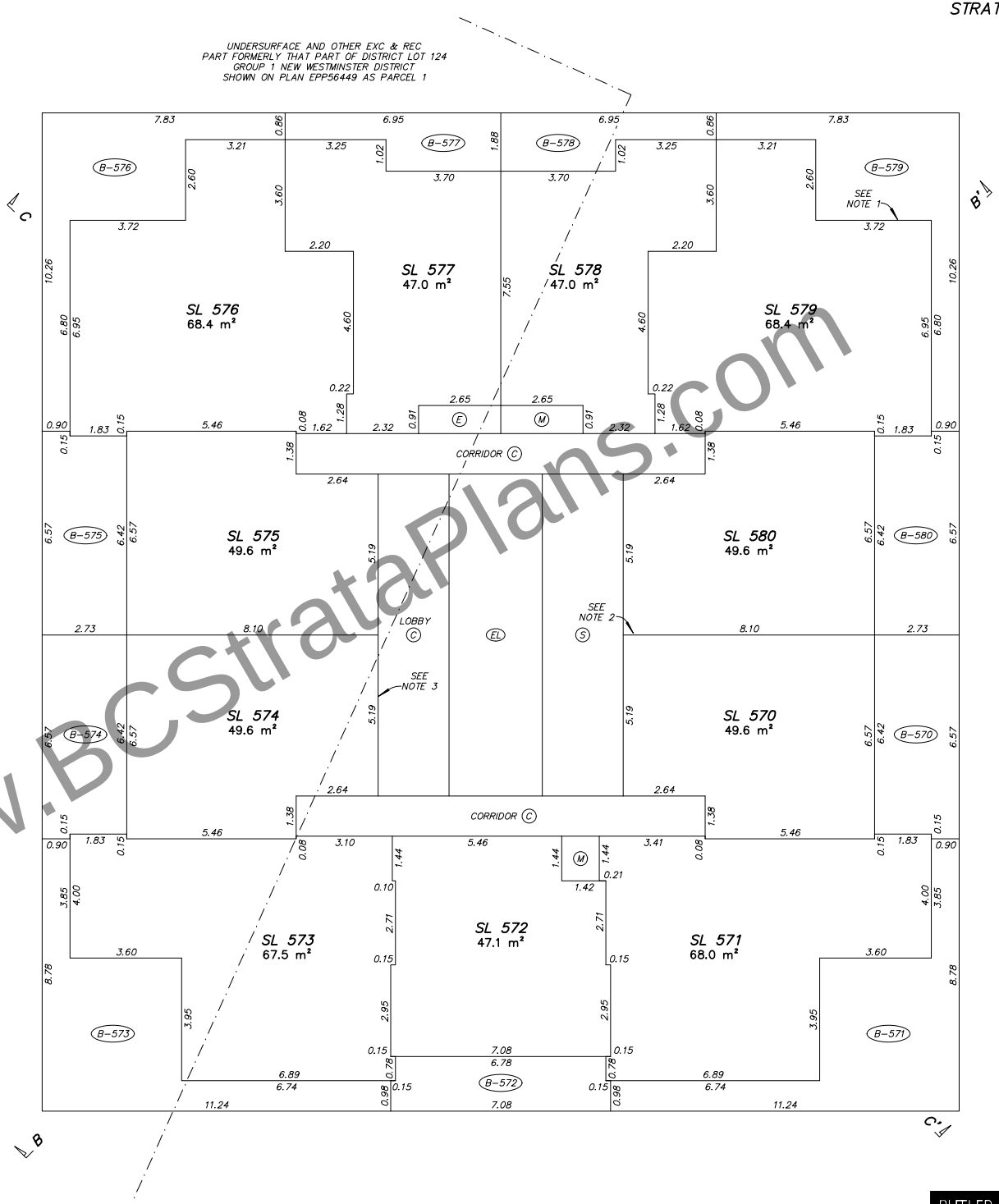

NOTES:

1. STRATA LOT BOUNDARY EXTERIOR FACE OF EXTERIOR WALLS (TYPICAL)
2. STRATA LOT BOUNDARY CENTRELINE OF DEMISING WALLS BETWEEN STRATA LOTS (TYPICAL)
3. STRATA LOT BOUNDARY EXTERIOR FACE OF WALLS ADJACENT TO COMMON AREAS (TYPICAL)
4. STRATA LOT BOUNDARY CENTRELINE FLOOR/CEILING (TYPICAL)
5. UPPER LIMIT OF LCP IS EXTENSION OF THE CENTRELINE OF THE FLOOR/CEILING ABOVE OR WHERE THERE IS NO FLOOR ABOVE, BY THE AVERAGE HEIGHT OF A STRATA LOT WITHIN THE SAME BUILDING (TYPICAL)

LEGEND

m²	DENOTES SQUARE METRES
SL	DENOTES STRATA LOT
PT	DENOTES PART
T	DENOTES TOTAL
Ex.	DENOTES EXPLANATORY
(C)	DENOTES COMMON PROPERTY
(E)	DENOTES ELECTRICAL ROOM BEING COMMON PROPERTY
(M)	DENOTES MECHANICAL ROOM BEING COMMON PROPERTY
(V)	DENOTES VESTIBULE BEING COMMON PROPERTY
(D)	DENOTES DUCT BEING COMMON PROPERTY
(S)	DENOTES STAIRS BEING COMMON PROPERTY
(EL)	DENOTES ELEVATOR BEING COMMON PROPERTY
(B-1)	DENOTES BALCONY BEING LIMITED COMMON PROPERTY FOR THE EXCLUSIVE USE OF STRATA LOT 1 (TYPICAL)
(RD-420)	DENOTES ROOF DECK BEING LIMITED COMMON PROPERTY FOR THE EXCLUSIVE USE OF STRATA LOT 420 (TYPICAL)

LCP AREAS ARE DEFINED AS TO HEIGHT BY THE CENTRE OF THE FLOOR ABOVE OR ITS EXTENSION OR WHERE THERE IS NO FLOOR ABOVE, BY THE AVERAGE HEIGHT OF A STRATA LOT WITHIN THE SAME BUILDING, UNLESS OTHERWISE NOTED

SECTION ARROWS POINT IN THE DIRECTION OF VIEW

www.BCStrataPlans.com

BUTLER SUNDVICK

JESSE MORIN, BCLS
Date: SEPTEMBER 16, 2022
File: 4772\Strata\Final
Dwg: 4772-FS

STRATA PLAN EPS8443

TOWER 2
LEVEL 17

0 5 10

SCALE 1 : 100 DISTANCES ARE IN METRES

THE INTENDED PLOT SCALE OF THIS PLAN IS 560 mm IN WIDTH BY 432 mm IN HEIGHT (C SIZE) WHEN PLOTTED AT A SCALE OF 1:100.

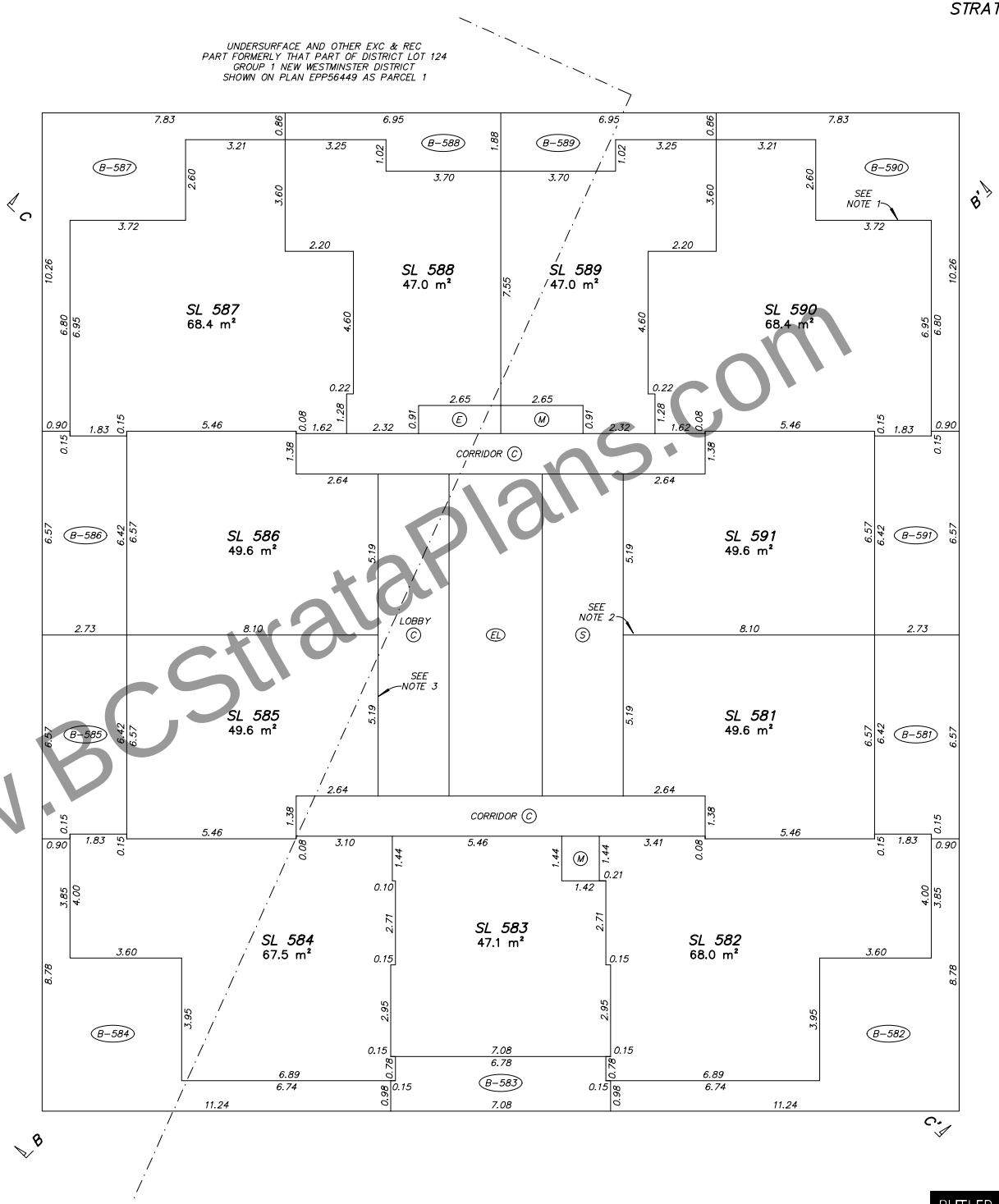

NOTES:

1. STRATA LOT BOUNDARY EXTERIOR FACE OF EXTERIOR WALLS (TYPICAL)
2. STRATA LOT BOUNDARY CENTRELINE OF DEMISING WALLS BETWEEN STRATA LOTS (TYPICAL)
3. STRATA LOT BOUNDARY EXTERIOR FACE OF WALLS ADJACENT TO COMMON AREAS (TYPICAL)
4. STRATA LOT BOUNDARY CENTRELINE FLOOR/CEILING (TYPICAL)
5. UPPER LIMIT OF LCP IS EXTENSION OF THE CENTRELINE OF THE FLOOR/CEILING ABOVE OR WHERE THERE IS NO FLOOR ABOVE, BY THE AVERAGE HEIGHT OF A STRATA LOT WITHIN THE SAME BUILDING (TYPICAL)

LEGEND

m²	DENOTES SQUARE METRES
SL	DENOTES STRATA LOT
PT	DENOTES PART
T	DENOTES TOTAL
Ex.	DENOTES EXPLANATORY
(C)	DENOTES COMMON PROPERTY
(E)	DENOTES ELECTRICAL ROOM BEING COMMON PROPERTY
(M)	DENOTES MECHANICAL ROOM BEING COMMON PROPERTY
(V)	DENOTES VESTIBULE BEING COMMON PROPERTY
(D)	DENOTES DUCT BEING COMMON PROPERTY
(S)	DENOTES STAIRS BEING COMMON PROPERTY
(EL)	DENOTES ELEVATOR BEING COMMON PROPERTY
(B-1)	DENOTES BALCONY BEING LIMITED COMMON PROPERTY FOR THE EXCLUSIVE USE OF STRATA LOT 1 (TYPICAL)
(RD-420)	DENOTES ROOF DECK BEING LIMITED COMMON PROPERTY FOR THE EXCLUSIVE USE OF STRATA LOT 420 (TYPICAL)

LCP AREAS ARE DEFINED AS TO HEIGHT BY THE CENTRE OF THE FLOOR ABOVE OR ITS EXTENSION OR WHERE THERE IS NO FLOOR ABOVE, BY THE AVERAGE HEIGHT OF A STRATA LOT WITHIN THE SAME BUILDING, UNLESS OTHERWISE NOTED

SECTION ARROWS POINT IN THE DIRECTION OF VIEW

BUTLER SUNDVICK

JESSE MORIN, BCLS
Date: SEPTEMBER 16, 2022
File: 4772\Strata\Final
Dwg: 4772-FS

www.BCStrataPlans.com

STRATA PLAN EPS8443

TOWER 2
LEVEL 18

0 5 10

SCALE 1 : 100 DISTANCES ARE IN METRES

THE INTENDED PLOT SCALE OF THIS PLAN IS 560 mm IN WIDTH BY 432 mm IN HEIGHT (C SIZE) WHEN PLOTTED AT A SCALE OF 1:100.

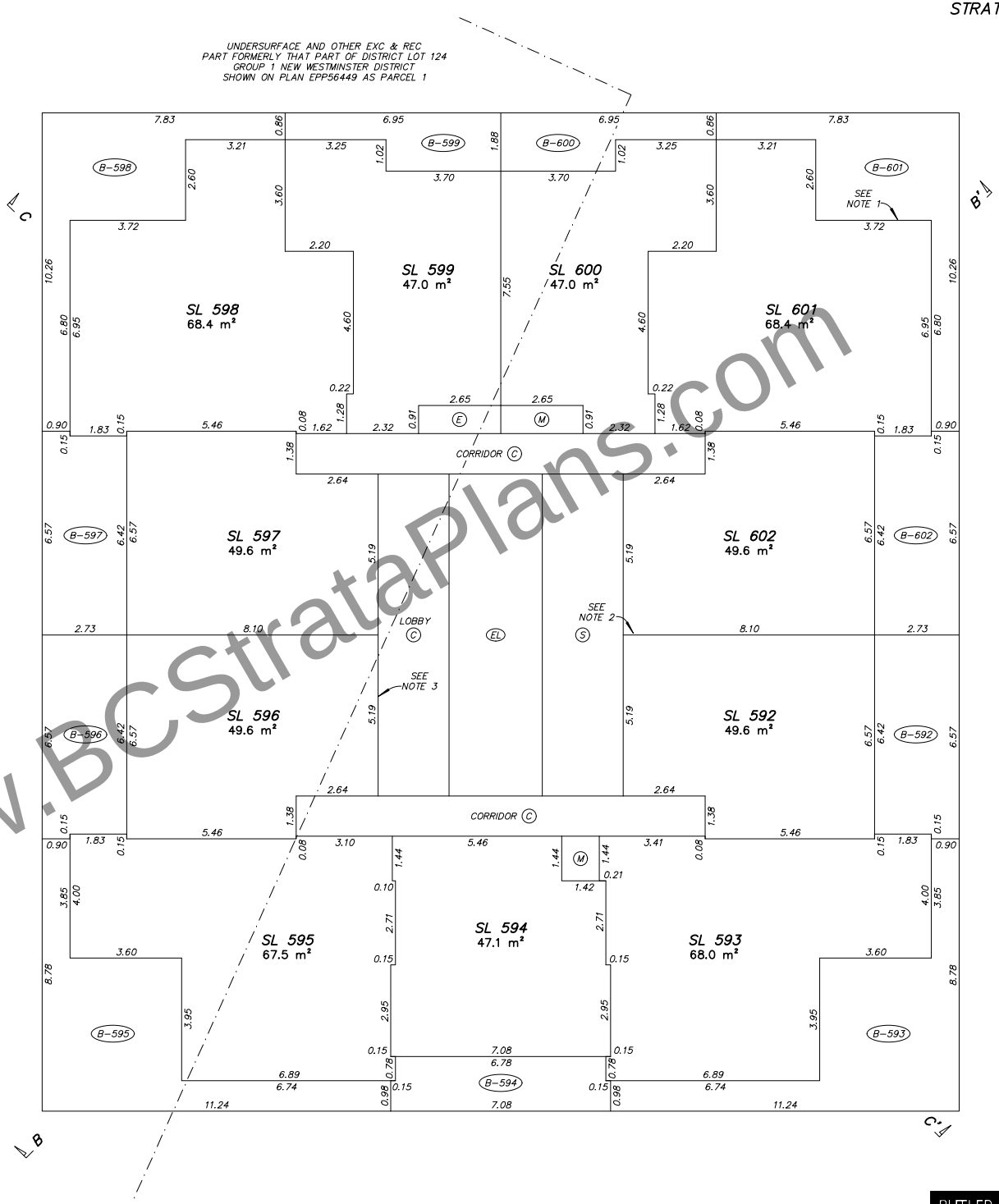

www.BCStrataPlans.com

NOTES:

1. STRATA LOT BOUNDARY EXTERIOR FACE OF EXTERIOR WALLS (TYPICAL)
2. STRATA LOT BOUNDARY CENTRELINE OF DEMISING WALLS BETWEEN STRATA LOTS (TYPICAL)
3. STRATA LOT BOUNDARY EXTERIOR FACE OF WALLS ADJACENT TO COMMON AREAS (TYPICAL)
4. STRATA LOT BOUNDARY CENTRELINE FLOOR/CEILING (TYPICAL)
5. UPPER LIMIT OF LCP IS EXTENSION OF THE CENTRELINE OF THE FLOOR/CEILING ABOVE OR WHERE THERE IS NO FLOOR ABOVE, BY THE AVERAGE HEIGHT OF A STRATA LOT WITHIN THE SAME BUILDING (TYPICAL)

LEGEND

m²	DENOTES SQUARE METRES
SL	DENOTES STRATA LOT
PT	DENOTES PART
T	DENOTES TOTAL
Ex.	DENOTES EXPLANATORY
(C)	DENOTES COMMON PROPERTY
(E)	DENOTES ELECTRICAL ROOM BEING COMMON PROPERTY
(M)	DENOTES MECHANICAL ROOM BEING COMMON PROPERTY
(V)	DENOTES VESTIBULE BEING COMMON PROPERTY
(D)	DENOTES DUCT BEING COMMON PROPERTY
(S)	DENOTES STAIRS BEING COMMON PROPERTY
(EL)	DENOTES ELEVATOR BEING COMMON PROPERTY
(B-1)	DENOTES BALCONY BEING LIMITED COMMON PROPERTY FOR THE EXCLUSIVE USE OF STRATA LOT 1 (TYPICAL)
(RD-420)	DENOTES ROOF DECK BEING LIMITED COMMON PROPERTY FOR THE EXCLUSIVE USE OF STRATA LOT 420 (TYPICAL)

LCP AREAS ARE DEFINED AS TO HEIGHT BY THE CENTRE OF THE FLOOR ABOVE OR ITS EXTENSION OR WHERE THERE IS NO FLOOR ABOVE, BY THE AVERAGE HEIGHT OF A STRATA LOT WITHIN THE SAME BUILDING, UNLESS OTHERWISE NOTED

SECTION ARROWS POINT IN THE DIRECTION OF VIEW

BUTLER SUNDVICK

JESSE MORIN, BCLS
Date: SEPTEMBER 16, 2022
File: 4772\Strata\Final
Dwg: 4772-FS

STRATA PLAN EPS8443

TOWER 2
LEVEL 19

0 5 10

SCALE 1 : 100 DISTANCES ARE IN METRES

THE INTENDED PLOT SCALE OF THIS PLAN IS 560 mm IN WIDTH BY 432 mm IN HEIGHT (C SIZE) WHEN PLOTTED AT A SCALE OF 1:100.

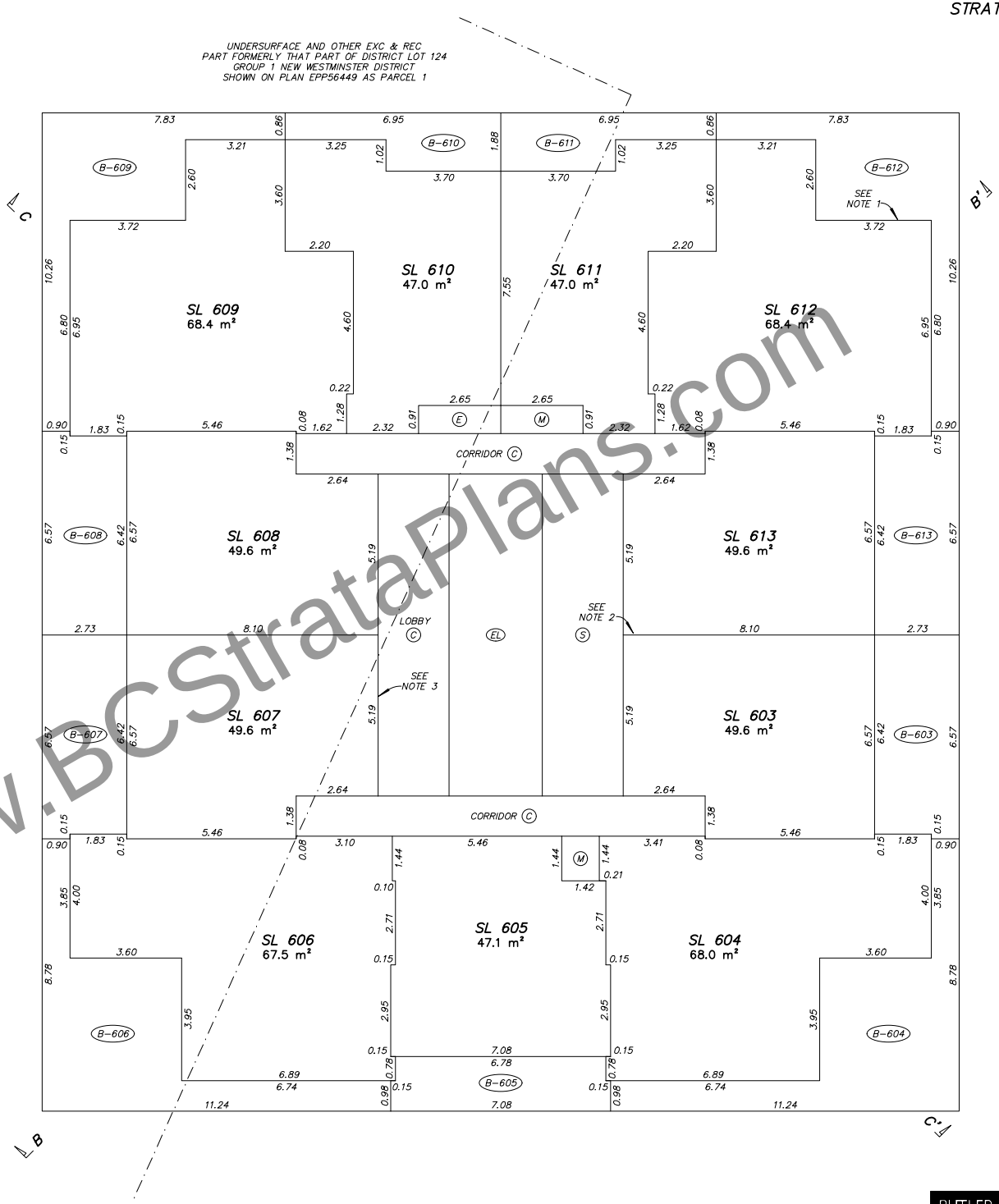

www.BCStrataPlans.com

NOTES:

1. STRATA LOT BOUNDARY EXTERIOR FACE OF EXTERIOR WALLS (TYPICAL)
2. STRATA LOT BOUNDARY CENTRELINE OF DEMISING WALLS BETWEEN STRATA LOTS (TYPICAL)
3. STRATA LOT BOUNDARY EXTERIOR FACE OF WALLS ADJACENT TO COMMON AREAS (TYPICAL)
4. STRATA LOT BOUNDARY CENTRELINE FLOOR/CEILING (TYPICAL)
5. UPPER LIMIT OF LCP IS EXTENSION OF THE CENTRELINE OF THE FLOOR/CEILING ABOVE OR WHERE THERE IS NO FLOOR ABOVE, BY THE AVERAGE HEIGHT OF A STRATA LOT WITHIN THE SAME BUILDING (TYPICAL)

LEGEND

m²	DENOTES SQUARE METRES
SL	DENOTES STRATA LOT
PT	DENOTES PART
T	DENOTES TOTAL
Ex.	DENOTES EXPLANATORY
(C)	DENOTES COMMON PROPERTY
(E)	DENOTES ELECTRICAL ROOM BEING COMMON PROPERTY
(M)	DENOTES MECHANICAL ROOM BEING COMMON PROPERTY
(V)	DENOTES VESTIBULE BEING COMMON PROPERTY
(D)	DENOTES DUCT BEING COMMON PROPERTY
(S)	DENOTES STAIRS BEING COMMON PROPERTY
(EL)	DENOTES ELEVATOR BEING COMMON PROPERTY
(B-1)	DENOTES BALCONY BEING LIMITED COMMON PROPERTY FOR THE EXCLUSIVE USE OF STRATA LOT 1 (TYPICAL)
(RD-420)	DENOTES ROOF DECK BEING LIMITED COMMON PROPERTY FOR THE EXCLUSIVE USE OF STRATA LOT 420 (TYPICAL)

LCP AREAS ARE DEFINED AS TO HEIGHT BY THE CENTRE OF THE FLOOR ABOVE OR ITS EXTENSION OR WHERE THERE IS NO FLOOR ABOVE, BY THE AVERAGE HEIGHT OF A STRATA LOT WITHIN THE SAME BUILDING, UNLESS OTHERWISE NOTED

SECTION ARROWS POINT IN THE DIRECTION OF VIEW

BUTLER SUNDVICK

JESSE MORIN, BCLS
Date: SEPTEMBER 16, 2022
File: 4772\Strata\Final
Dwg: 4772-FS

STRATA PLAN EPS8443

TOWER 2
LEVEL 20

0 5 10

SCALE 1 : 100 DISTANCES ARE IN METRES

THE INTENDED PLOT SCALE OF THIS PLAN IS 560 mm IN WIDTH BY 432 mm IN HEIGHT (C SIZE) WHEN PLOTTED AT A SCALE OF 1:100.

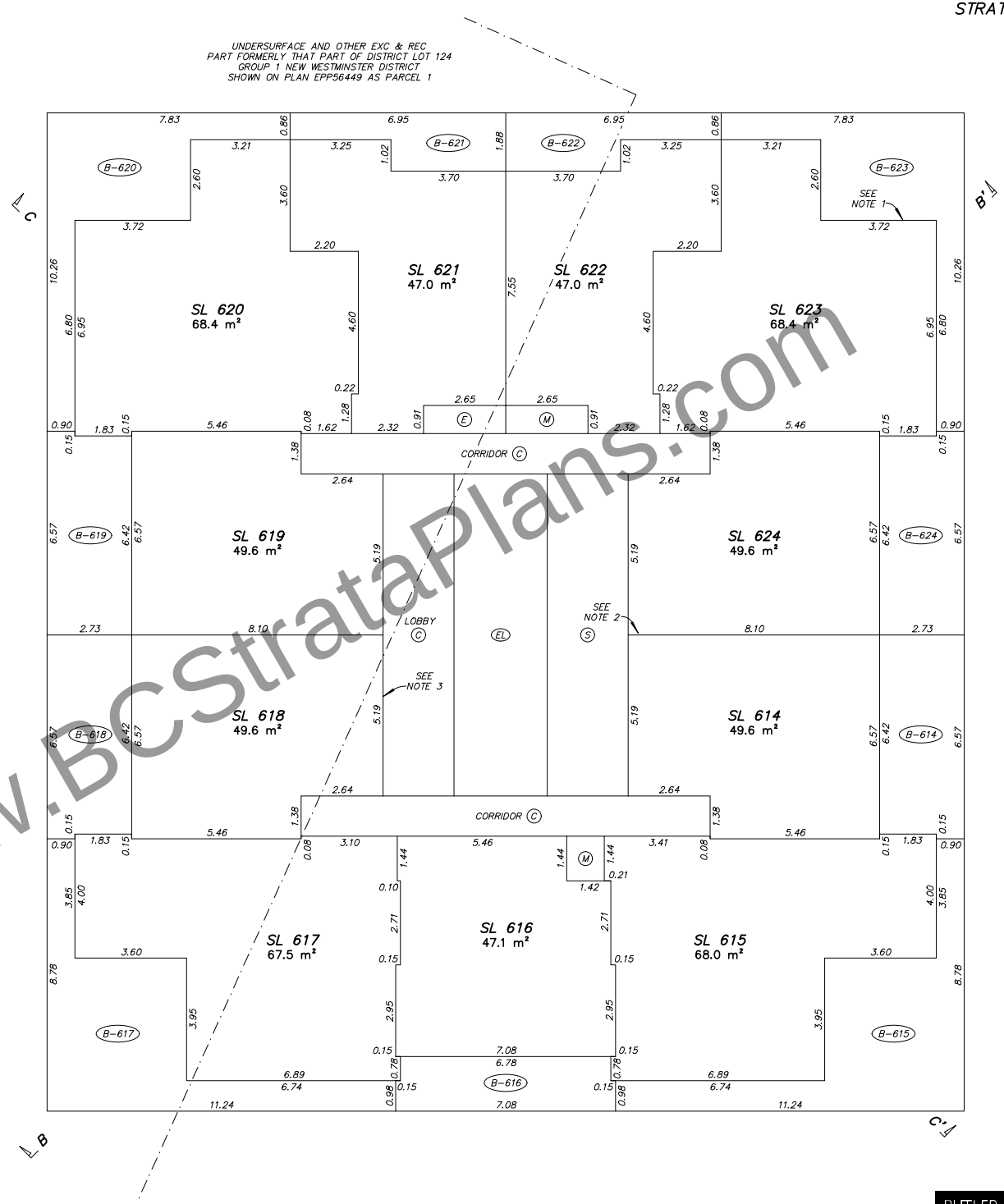

www.BCStrataPlans.com

NOTES:

1. STRATA LOT BOUNDARY EXTERIOR FACE OF EXTERIOR WALLS (TYPICAL)
2. STRATA LOT BOUNDARY CENTRELINE OF DEMISING WALLS BETWEEN STRATA LOTS (TYPICAL)
3. STRATA LOT BOUNDARY EXTERIOR FACE OF WALLS ADJACENT TO COMMON AREAS (TYPICAL)
4. STRATA LOT BOUNDARY CENTRELINE FLOOR/CEILING (TYPICAL)
5. UPPER LIMIT OF LCP IS EXTENSION OF THE CENTRELINE OF THE FLOOR/CEILING ABOVE OR WHERE THERE IS NO FLOOR ABOVE, BY THE AVERAGE HEIGHT OF A STRATA LOT WITHIN THE SAME BUILDING (TYPICAL)

LEGEND

m²	DENOTES SQUARE METRES
SL	DENOTES STRATA LOT
PT	DENOTES PART
T	DENOTES TOTAL
Ex.	DENOTES EXPLANATORY
(C)	DENOTES COMMON PROPERTY
(E)	DENOTES ELECTRICAL ROOM BEING COMMON PROPERTY
(M)	DENOTES MECHANICAL ROOM BEING COMMON PROPERTY
(V)	DENOTES VESTIBULE BEING COMMON PROPERTY
(D)	DENOTES DUCT BEING COMMON PROPERTY
(S)	DENOTES STAIRS BEING COMMON PROPERTY
(EL)	DENOTES ELEVATOR BEING COMMON PROPERTY
(B-1)	DENOTES BALCONY BEING LIMITED COMMON PROPERTY FOR THE EXCLUSIVE USE OF STRATA LOT 1 (TYPICAL)
(RD-420)	DENOTES ROOF DECK BEING LIMITED COMMON PROPERTY FOR THE EXCLUSIVE USE OF STRATA LOT 420 (TYPICAL)

LCP AREAS ARE DEFINED AS TO HEIGHT BY THE CENTRE OF THE FLOOR ABOVE OR ITS EXTENSION OR WHERE THERE IS NO FLOOR ABOVE, BY THE AVERAGE HEIGHT OF A STRATA LOT WITHIN THE SAME BUILDING, UNLESS OTHERWISE NOTED

SECTION ARROWS POINT IN THE DIRECTION OF VIEW

BUTLER SUNDVICK

JESSE MORIN, BCLS
Date: SEPTEMBER 16, 2022
File: 4772\Strata\Final
Dwg: 4772-FS

STRATA PLAN EPS8443

TOWER 2
LEVEL 21

0 5 10

SCALE 1 : 100 DISTANCES ARE IN METRES

THE INTENDED PLOT SCALE OF THIS PLAN IS 560 mm IN WIDTH BY 432 mm IN HEIGHT (C SIZE) WHEN PLOTTED AT A SCALE OF 1:100.

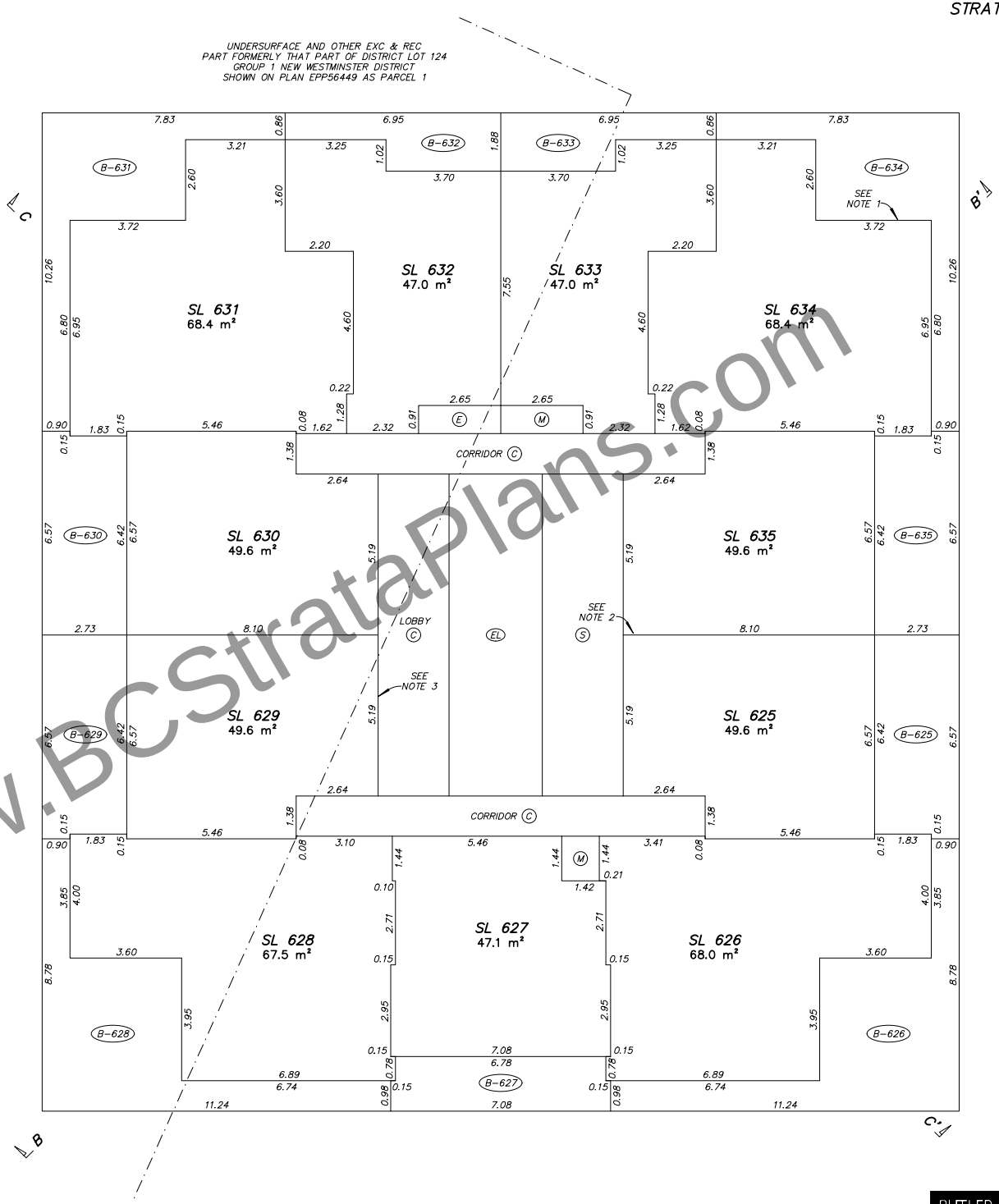

NOTES:

1. STRATA LOT BOUNDARY EXTERIOR FACE OF EXTERIOR WALLS (TYPICAL)
2. STRATA LOT BOUNDARY CENTRELINE OF DEMISING WALLS BETWEEN STRATA LOTS (TYPICAL)
3. STRATA LOT BOUNDARY EXTERIOR FACE OF WALLS ADJACENT TO COMMON AREAS (TYPICAL)
4. STRATA LOT BOUNDARY CENTRELINE FLOOR/CEILING (TYPICAL)
5. UPPER LIMIT OF LCP IS EXTENSION OF THE CENTRELINE OF THE FLOOR/CEILING ABOVE OR WHERE THERE IS NO FLOOR ABOVE, BY THE AVERAGE HEIGHT OF A STRATA LOT WITHIN THE SAME BUILDING (TYPICAL)

LEGEND

m²	DENOTES SQUARE METRES
SL	DENOTES STRATA LOT
PT	DENOTES PART
T	DENOTES TOTAL
Ex.	DENOTES EXPLANATORY
(C)	DENOTES COMMON PROPERTY
(E)	DENOTES ELECTRICAL ROOM BEING COMMON PROPERTY
(M)	DENOTES MECHANICAL ROOM BEING COMMON PROPERTY
(V)	DENOTES VESTIBULE BEING COMMON PROPERTY
(D)	DENOTES DUCT BEING COMMON PROPERTY
(S)	DENOTES STAIRS BEING COMMON PROPERTY
(EL)	DENOTES ELEVATOR BEING COMMON PROPERTY
(B-1)	DENOTES BALCONY BEING LIMITED COMMON PROPERTY FOR THE EXCLUSIVE USE OF STRATA LOT 1 (TYPICAL)
(RD-420)	DENOTES ROOF DECK BEING LIMITED COMMON PROPERTY FOR THE EXCLUSIVE USE OF STRATA LOT 420 (TYPICAL)

LCP AREAS ARE DEFINED AS TO HEIGHT BY THE CENTRE OF THE FLOOR ABOVE OR ITS EXTENSION OR WHERE THERE IS NO FLOOR ABOVE, BY THE AVERAGE HEIGHT OF A STRATA LOT WITHIN THE SAME BUILDING, UNLESS OTHERWISE NOTED

SECTION ARROWS POINT IN THE DIRECTION OF VIEW

www.BCStrataPlans.com

BUTLER SUNDVICK

JESSE MORIN, BCLS
Date: SEPTEMBER 16, 2022
File: 4772\Strata\Final
Dwg: 4772-FS

STRATA PLAN EPS8443

TOWER 2
LEVEL 22

0 5 10

SCALE 1 : 100 DISTANCES ARE IN METRES

THE INTENDED PLOT SCALE OF THIS PLAN IS 560 mm IN WIDTH BY 432 mm IN HEIGHT (C SIZE) WHEN PLOTTED AT A SCALE OF 1:100.

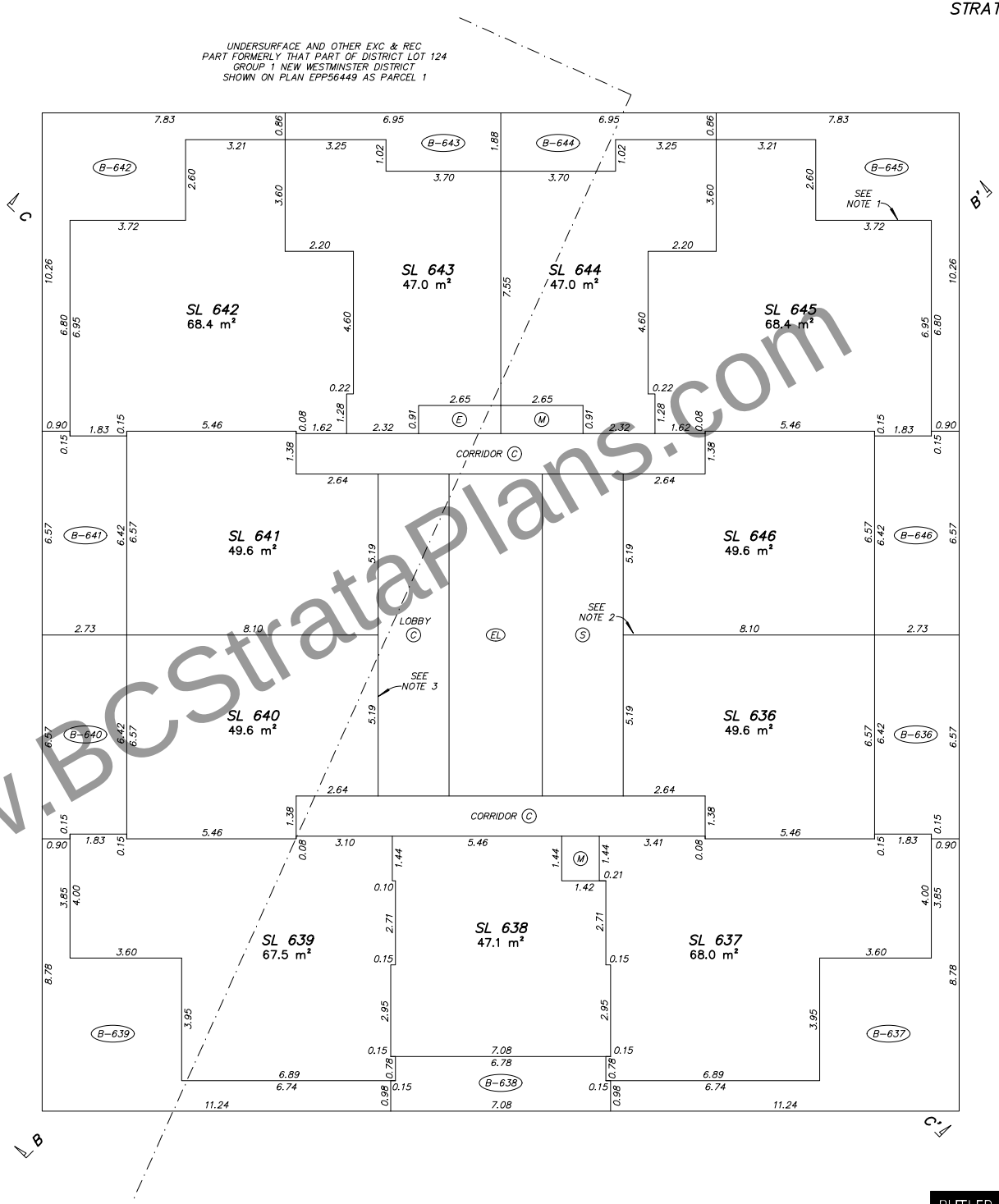

NOTES:

1. STRATA LOT BOUNDARY EXTERIOR FACE OF EXTERIOR WALLS (TYPICAL)
2. STRATA LOT BOUNDARY CENTRELINE OF DEMISING WALLS BETWEEN STRATA LOTS (TYPICAL)
3. STRATA LOT BOUNDARY EXTERIOR FACE OF WALLS ADJACENT TO COMMON AREAS (TYPICAL)
4. STRATA LOT BOUNDARY CENTRELINE FLOOR/CEILING (TYPICAL)
5. UPPER LIMIT OF LCP IS EXTENSION OF THE CENTRELINE OF THE FLOOR/CEILING ABOVE OR WHERE THERE IS NO FLOOR ABOVE, BY THE AVERAGE HEIGHT OF A STRATA LOT WITHIN THE SAME BUILDING (TYPICAL)

LEGEND

m²	DENOTES SQUARE METRES
SL	DENOTES STRATA LOT
PT	DENOTES PART
T	DENOTES TOTAL
Ex.	DENOTES EXPLANATORY
(C)	DENOTES COMMON PROPERTY
(E)	DENOTES ELECTRICAL ROOM BEING COMMON PROPERTY
(M)	DENOTES MECHANICAL ROOM BEING COMMON PROPERTY
(V)	DENOTES VESTIBULE BEING COMMON PROPERTY
(D)	DENOTES DUCT BEING COMMON PROPERTY
(S)	DENOTES STAIRS BEING COMMON PROPERTY
(EL)	DENOTES ELEVATOR BEING COMMON PROPERTY
(B-1)	DENOTES BALCONY BEING LIMITED COMMON PROPERTY FOR THE EXCLUSIVE USE OF STRATA LOT 1 (TYPICAL)
(RD-420)	DENOTES ROOF DECK BEING LIMITED COMMON PROPERTY FOR THE EXCLUSIVE USE OF STRATA LOT 420 (TYPICAL)

LCP AREAS ARE DEFINED AS TO HEIGHT BY THE CENTRE OF THE FLOOR ABOVE OR ITS EXTENSION OR WHERE THERE IS NO FLOOR ABOVE, BY THE AVERAGE HEIGHT OF A STRATA LOT WITHIN THE SAME BUILDING, UNLESS OTHERWISE NOTED

SECTION ARROWS POINT IN THE DIRECTION OF VIEW

www.BCStrataPlans.com

BUTLER SUNDVICK

JESSE MORIN, BCLS
Date: SEPTEMBER 16, 2022
File: 4772\Strata\Final
Dwg: 4772-FS

STRATA PLAN EPS8443

TOWER 2
LEVEL 23

0 5 10

SCALE 1 : 100 DISTANCES ARE IN METRES

THE INTENDED PLOT SCALE OF THIS PLAN IS 560 mm IN WIDTH BY 432 mm IN HEIGHT (C SIZE) WHEN PLOTTED AT A SCALE OF 1:100.

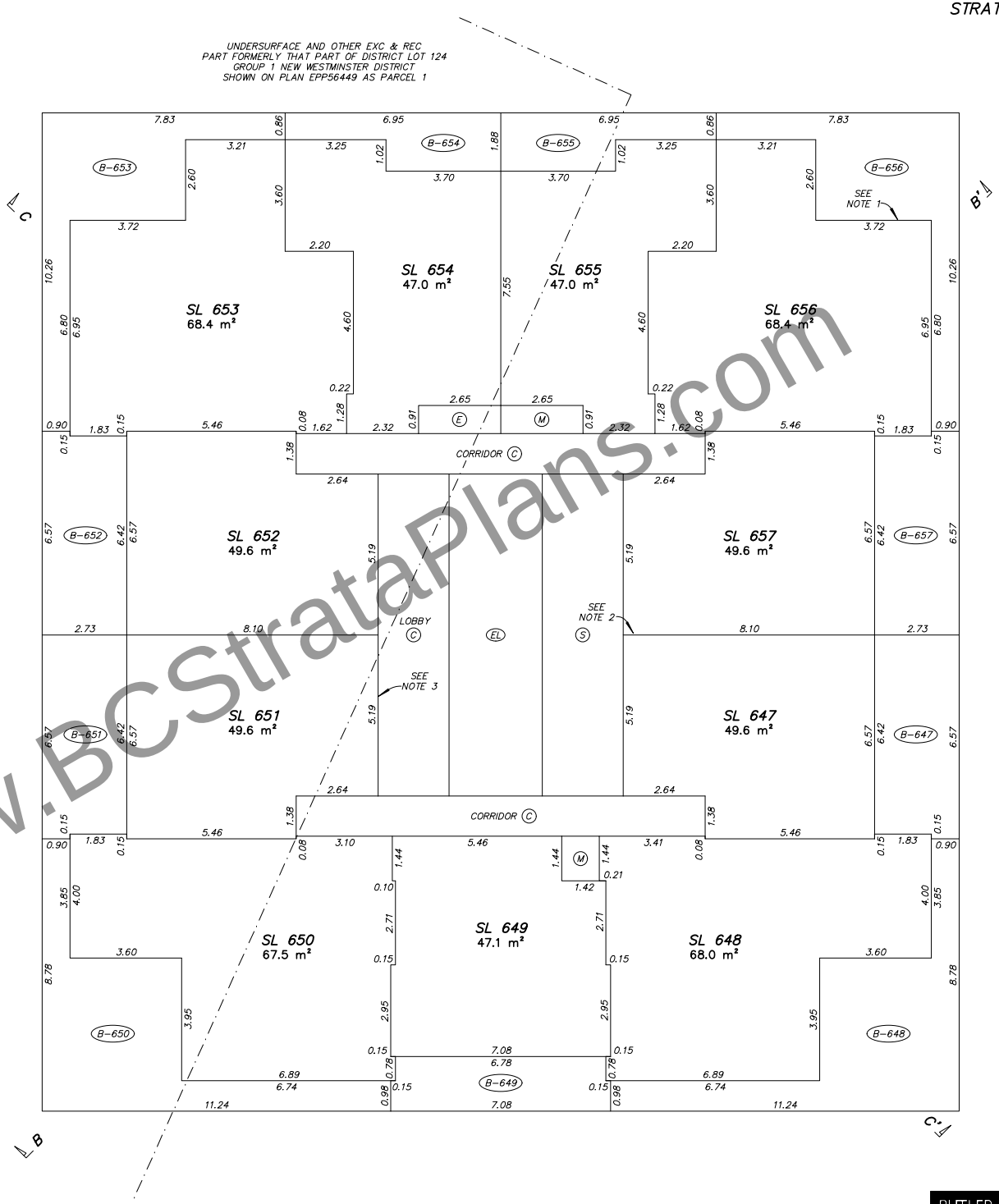

www.BCStrataPlans.com

NOTES:

1. STRATA LOT BOUNDARY EXTERIOR FACE OF EXTERIOR WALLS (TYPICAL)
2. STRATA LOT BOUNDARY CENTRELINE OF DEMISING WALLS BETWEEN STRATA LOTS (TYPICAL)
3. STRATA LOT BOUNDARY EXTERIOR FACE OF WALLS ADJACENT TO COMMON AREAS (TYPICAL)
4. STRATA LOT BOUNDARY CENTRELINE FLOOR/CEILING (TYPICAL)
5. UPPER LIMIT OF LCP IS EXTENSION OF THE CENTRELINE OF THE FLOOR/CEILING ABOVE OR WHERE THERE IS NO FLOOR ABOVE, BY THE AVERAGE HEIGHT OF A STRATA LOT WITHIN THE SAME BUILDING (TYPICAL)

LEGEND

m²	DENOTES SQUARE METRES
SL	DENOTES STRATA LOT
PT	DENOTES PART
T	DENOTES TOTAL
Ex.	DENOTES EXPLANATORY
(C)	DENOTES COMMON PROPERTY
(E)	DENOTES ELECTRICAL ROOM BEING COMMON PROPERTY
(M)	DENOTES MECHANICAL ROOM BEING COMMON PROPERTY
(V)	DENOTES VESTIBULE BEING COMMON PROPERTY
(D)	DENOTES DUCT BEING COMMON PROPERTY
(S)	DENOTES STAIRS BEING COMMON PROPERTY
(EL)	DENOTES ELEVATOR BEING COMMON PROPERTY
(B-1)	DENOTES BALCONY BEING LIMITED COMMON PROPERTY FOR THE EXCLUSIVE USE OF STRATA LOT 1 (TYPICAL)
(RD-420)	DENOTES ROOF DECK BEING LIMITED COMMON PROPERTY FOR THE EXCLUSIVE USE OF STRATA LOT 420 (TYPICAL)

LCP AREAS ARE DEFINED AS TO HEIGHT BY THE CENTRE OF THE FLOOR ABOVE OR ITS EXTENSION OR WHERE THERE IS NO FLOOR ABOVE, BY THE AVERAGE HEIGHT OF A STRATA LOT WITHIN THE SAME BUILDING, UNLESS OTHERWISE NOTED

SECTION ARROWS POINT IN THE DIRECTION OF VIEW

BUTLER SUNDVICK

JESSE MORIN, BCLS
Date: SEPTEMBER 16, 2022
File: 4772\Strata\Final
Dwg: 4772-FS

STRATA PLAN EPS8443

TOWER 2
LEVEL 24

0 5 10

SCALE 1 : 100 DISTANCES ARE IN METRES

THE INTENDED PLOT SCALE OF THIS PLAN IS 560 mm IN WIDTH BY 432 mm IN HEIGHT (C SIZE) WHEN PLOTTED AT A SCALE OF 1:100.

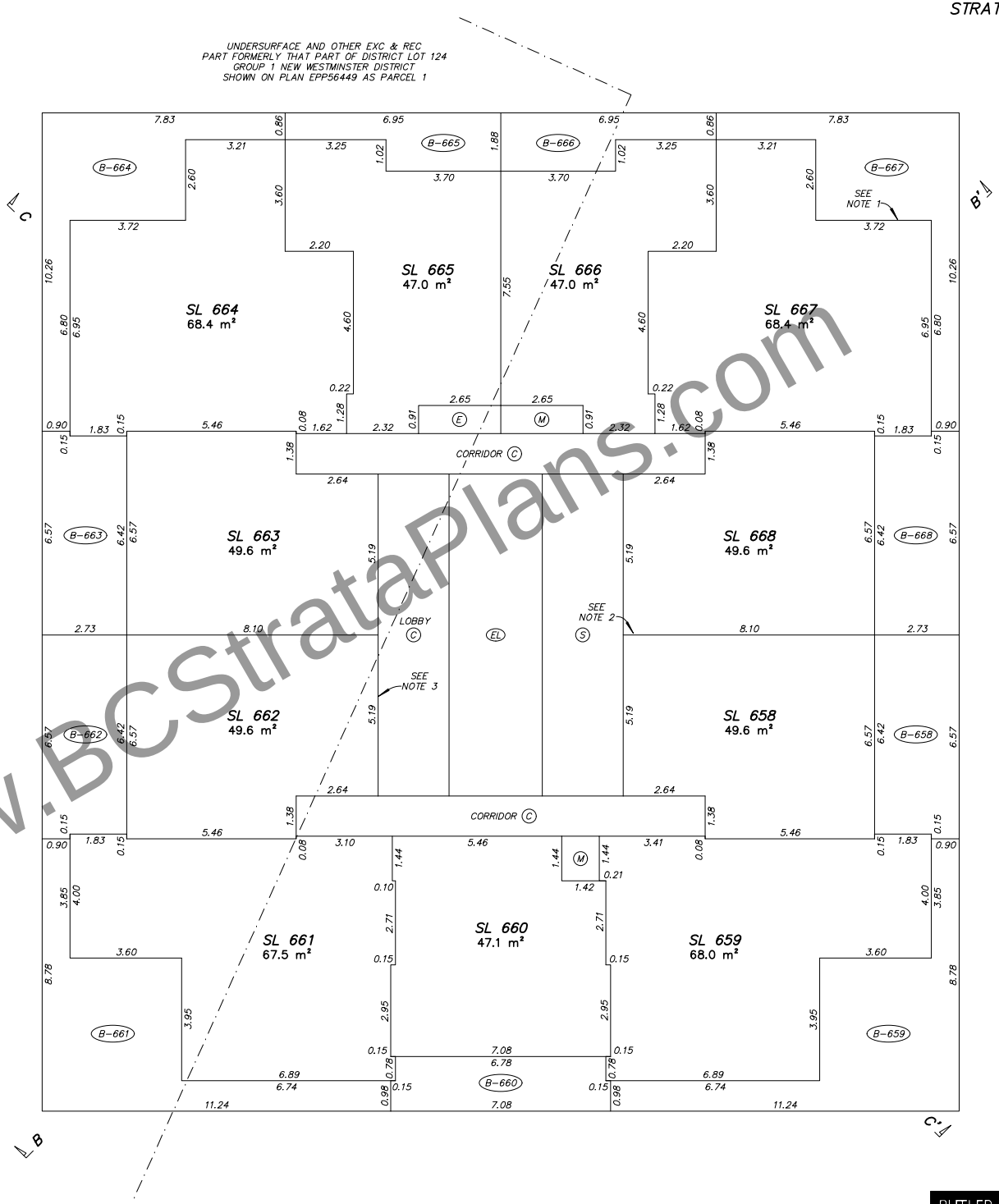

NOTES:

1. STRATA LOT BOUNDARY EXTERIOR FACE OF EXTERIOR WALLS (TYPICAL)
2. STRATA LOT BOUNDARY CENTRELINE OF DEMISING WALLS BETWEEN STRATA LOTS (TYPICAL)
3. STRATA LOT BOUNDARY EXTERIOR FACE OF WALLS ADJACENT TO COMMON AREAS (TYPICAL)
4. STRATA LOT BOUNDARY CENTRELINE FLOOR/CEILING (TYPICAL)
5. UPPER LIMIT OF LCP IS EXTENSION OF THE CENTRELINE OF THE FLOOR/CEILING ABOVE OR WHERE THERE IS NO FLOOR ABOVE, BY THE AVERAGE HEIGHT OF A STRATA LOT WITHIN THE SAME BUILDING (TYPICAL)

LEGEND

m²	DENOTES SQUARE METRES
SL	DENOTES STRATA LOT
PT	DENOTES PART
T	DENOTES TOTAL
Ex.	DENOTES EXPLANATORY
(C)	DENOTES COMMON PROPERTY
(E)	DENOTES ELECTRICAL ROOM BEING COMMON PROPERTY
(M)	DENOTES MECHANICAL ROOM BEING COMMON PROPERTY
(V)	DENOTES VESTIBULE BEING COMMON PROPERTY
(D)	DENOTES DUCT BEING COMMON PROPERTY
(S)	DENOTES STAIRS BEING COMMON PROPERTY
(EL)	DENOTES ELEVATOR BEING COMMON PROPERTY
(B-1)	DENOTES BALCONY BEING LIMITED COMMON PROPERTY FOR THE EXCLUSIVE USE OF STRATA LOT 1 (TYPICAL)
(RD-420)	DENOTES ROOF DECK BEING LIMITED COMMON PROPERTY FOR THE EXCLUSIVE USE OF STRATA LOT 420 (TYPICAL)

LCP AREAS ARE DEFINED AS TO HEIGHT BY THE CENTRE OF THE FLOOR ABOVE OR ITS EXTENSION OR WHERE THERE IS NO FLOOR ABOVE, BY THE AVERAGE HEIGHT OF A STRATA LOT WITHIN THE SAME BUILDING, UNLESS OTHERWISE NOTED

SECTION ARROWS POINT IN THE DIRECTION OF VIEW

BUTLER SUNDVICK

JESSE MORIN, BCLS
Date: SEPTEMBER 16, 2022
File: 4772\Strata\Final
Dwg: 4772-FS

www.BCStrataPlans.com

STRATA PLAN EPS8443

TOWER 2
LEVEL 25

0 5 10

SCALE 1 : 100 DISTANCES ARE IN METRES

THE INTENDED PLOT SCALE OF THIS PLAN IS 560 mm IN WIDTH BY 432 mm IN HEIGHT (C SIZE) WHEN PLOTTED AT A SCALE OF 1:100.

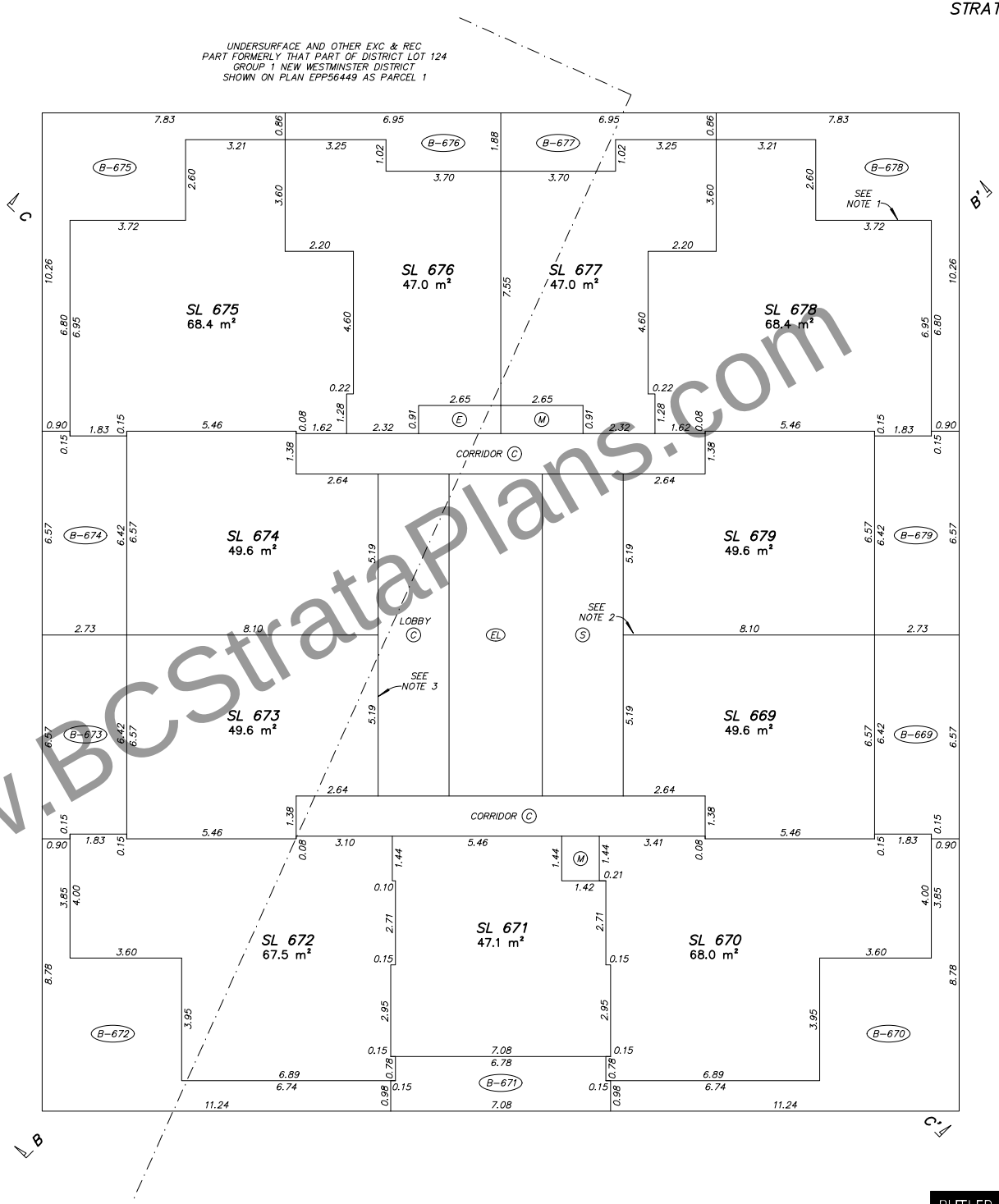

www.BCStrataPlans.com

NOTES:

1. STRATA LOT BOUNDARY EXTERIOR FACE OF EXTERIOR WALLS (TYPICAL)
2. STRATA LOT BOUNDARY CENTRELINE OF DEMISING WALLS BETWEEN STRATA LOTS (TYPICAL)
3. STRATA LOT BOUNDARY EXTERIOR FACE OF WALLS ADJACENT TO COMMON AREAS (TYPICAL)
4. STRATA LOT BOUNDARY CENTRELINE FLOOR/CEILING (TYPICAL)
5. UPPER LIMIT OF LCP IS EXTENSION OF THE CENTRELINE OF THE FLOOR/CEILING ABOVE OR WHERE THERE IS NO FLOOR ABOVE, BY THE AVERAGE HEIGHT OF A STRATA LOT WITHIN THE SAME BUILDING (TYPICAL)

LEGEND

m²	DENOTES SQUARE METRES
SL	DENOTES STRATA LOT
PT	DENOTES PART
T	DENOTES TOTAL
Ex.	DENOTES EXPLANATORY
(C)	DENOTES COMMON PROPERTY
(E)	DENOTES ELECTRICAL ROOM BEING COMMON PROPERTY
(M)	DENOTES MECHANICAL ROOM BEING COMMON PROPERTY
(V)	DENOTES VESTIBULE BEING COMMON PROPERTY
(D)	DENOTES DUCT BEING COMMON PROPERTY
(S)	DENOTES STAIRS BEING COMMON PROPERTY
(EL)	DENOTES ELEVATOR BEING COMMON PROPERTY
(B-1)	DENOTES BALCONY BEING LIMITED COMMON PROPERTY FOR THE EXCLUSIVE USE OF STRATA LOT 1 (TYPICAL)
(RD-420)	DENOTES ROOF DECK BEING LIMITED COMMON PROPERTY FOR THE EXCLUSIVE USE OF STRATA LOT 420 (TYPICAL)

LCP AREAS ARE DEFINED AS TO HEIGHT BY THE CENTRE OF THE FLOOR ABOVE OR ITS EXTENSION OR WHERE THERE IS NO FLOOR ABOVE, BY THE AVERAGE HEIGHT OF A STRATA LOT WITHIN THE SAME BUILDING, UNLESS OTHERWISE NOTED

SECTION ARROWS POINT IN THE DIRECTION OF VIEW

BUTLER SUNDVICK

JESSE MORIN, BCLS
Date: SEPTEMBER 16, 2022
File: 4772\Strata\Final
Dwg: 4772-FS

STRATA PLAN EPS8443

TOWER 2
LEVEL 26

0 5 10

SCALE 1 : 100 DISTANCES ARE IN METRES

THE INTENDED PLOT SCALE OF THIS PLAN IS 560 mm IN WIDTH BY 432 mm IN HEIGHT (C SIZE) WHEN PLOTTED AT A SCALE OF 1:100.

UNDERSURFACE AND OTHER EXC & REC
PART FORMERLY THAT PART OF DISTRICT LOT 124
GROUP 1 NEW WESTMINSTER DISTRICT
SHOWN ON PLAN EPP56449 AS PARCEL 1

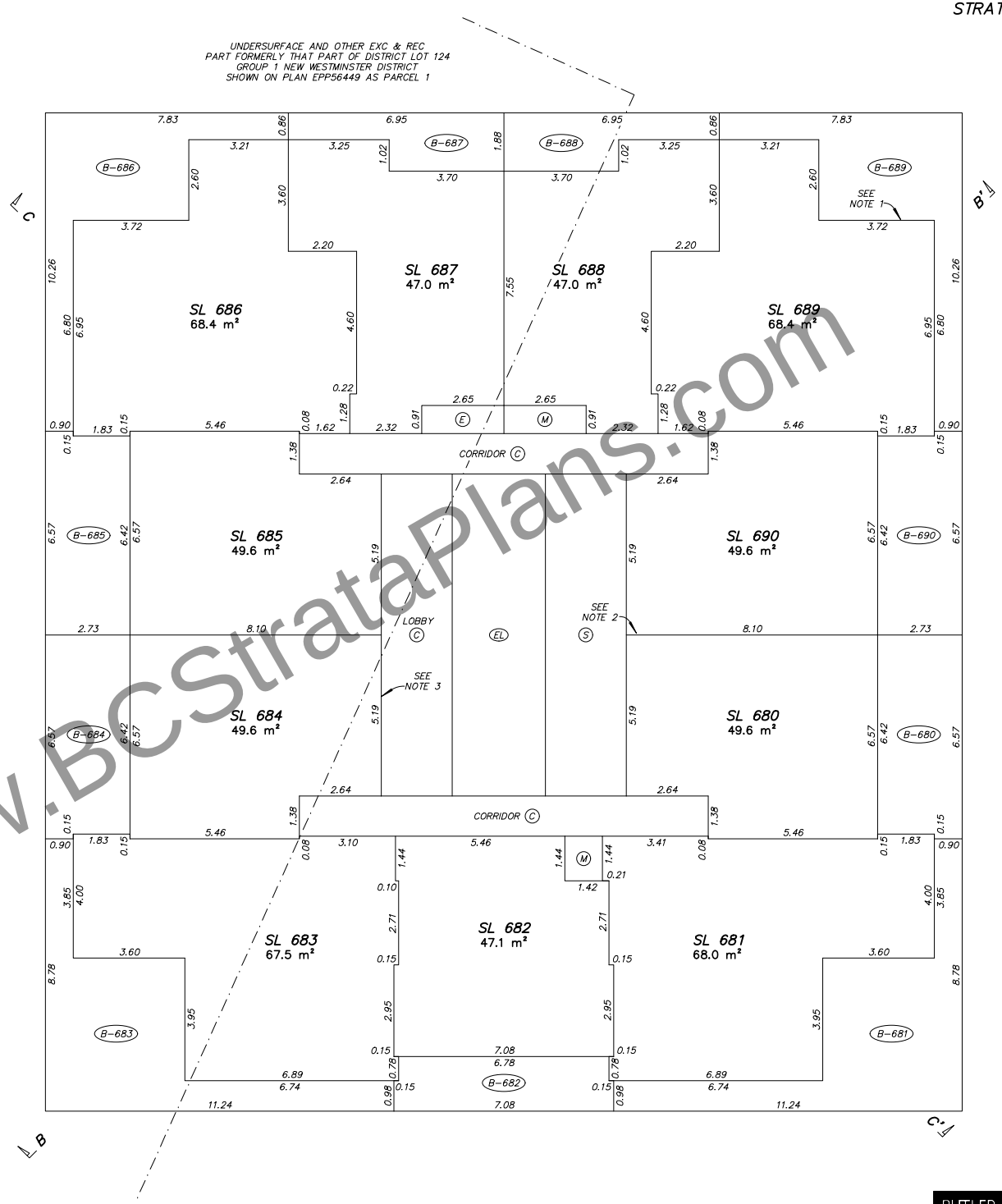

NOTES:

1. STRATA LOT BOUNDARY EXTERIOR FACE OF EXTERIOR WALLS (TYPICAL)
2. STRATA LOT BOUNDARY CENTRELINE OF DEMISING WALLS BETWEEN STRATA LOTS (TYPICAL)
3. STRATA LOT BOUNDARY EXTERIOR FACE OF WALLS ADJACENT TO COMMON AREAS (TYPICAL)
4. STRATA LOT BOUNDARY CENTRELINE FLOOR/CEILING (TYPICAL)
5. UPPER LIMIT OF LCP IS EXTENSION OF THE CENTRELINE OF THE FLOOR/CEILING ABOVE OR WHERE THERE IS NO FLOOR ABOVE, BY THE AVERAGE HEIGHT OF A STRATA LOT WITHIN THE SAME BUILDING (TYPICAL)

LEGEND

m²	DENOTES SQUARE METRES
SL	DENOTES STRATA LOT
PT	DENOTES PART
T	DENOTES TOTAL
Ex.	DENOTES EXPLANATORY
(C)	DENOTES COMMON PROPERTY
(E)	DENOTES ELECTRICAL ROOM BEING COMMON PROPERTY
(M)	DENOTES MECHANICAL ROOM BEING COMMON PROPERTY
(V)	DENOTES VESTIBULE BEING COMMON PROPERTY
(D)	DENOTES DUCT BEING COMMON PROPERTY
(S)	DENOTES STAIRS BEING COMMON PROPERTY
(EL)	DENOTES ELEVATOR BEING COMMON PROPERTY
(B-1)	DENOTES BALCONY BEING LIMITED COMMON PROPERTY FOR THE EXCLUSIVE USE OF STRATA LOT 1 (TYPICAL)
(RD-420)	DENOTES ROOF DECK BEING LIMITED COMMON PROPERTY FOR THE EXCLUSIVE USE OF STRATA LOT 420 (TYPICAL)

LCP AREAS ARE DEFINED AS TO HEIGHT BY THE CENTRE OF THE FLOOR ABOVE OR ITS EXTENSION OR WHERE THERE IS NO FLOOR ABOVE, BY THE AVERAGE HEIGHT OF A STRATA LOT WITHIN THE SAME BUILDING, UNLESS OTHERWISE NOTED

SECTION ARROWS POINT IN THE DIRECTION OF VIEW

www.BCStrataPlans.com

BUTLER SUNDVICK

JESSE MORIN, BCLS
Date: SEPTEMBER 16, 2022
File: 4772\Strata\Final
Dwg: 4772-FS

STRATA PLAN EPS8443

TOWER 2
LEVEL 27

0 5 10

SCALE 1 : 100 DISTANCES ARE IN METRES

THE INTENDED PLOT SCALE OF THIS PLAN IS 560 mm IN WIDTH BY 432 mm IN HEIGHT (C SIZE) WHEN PLOTTED AT A SCALE OF 1:100.

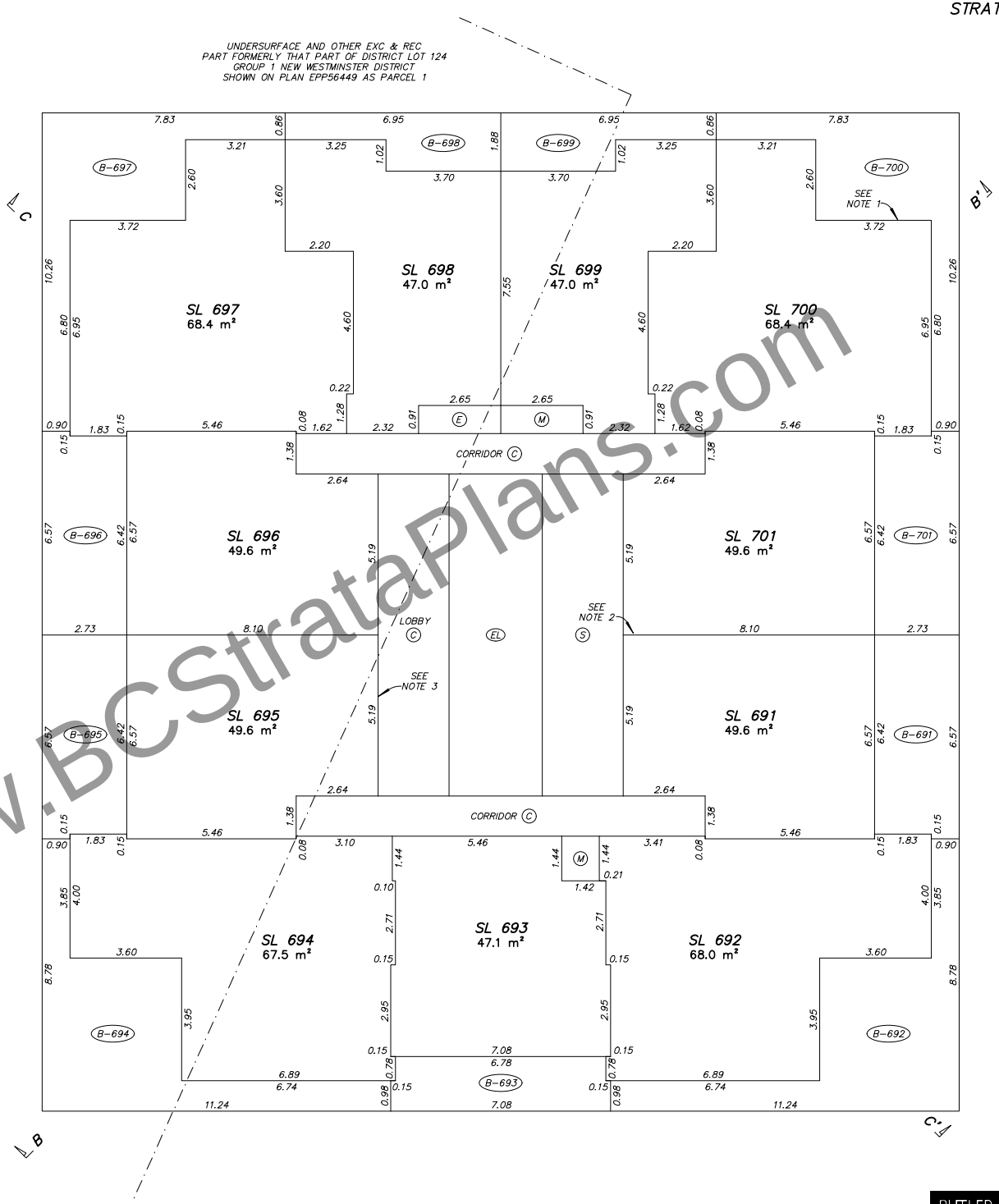

NOTES:

1. STRATA LOT BOUNDARY EXTERIOR FACE OF EXTERIOR WALLS (TYPICAL)
2. STRATA LOT BOUNDARY CENTRELINE OF DEMISING WALLS BETWEEN STRATA LOTS (TYPICAL)
3. STRATA LOT BOUNDARY EXTERIOR FACE OF WALLS ADJACENT TO COMMON AREAS (TYPICAL)
4. STRATA LOT BOUNDARY CENTRELINE FLOOR/CEILING (TYPICAL)
5. UPPER LIMIT OF LCP IS EXTENSION OF THE CENTRELINE OF THE FLOOR/CEILING ABOVE OR WHERE THERE IS NO FLOOR ABOVE, BY THE AVERAGE HEIGHT OF A STRATA LOT WITHIN THE SAME BUILDING (TYPICAL)

LEGEND

m²	DENOTES SQUARE METRES
SL	DENOTES STRATA LOT
PT	DENOTES PART
T	DENOTES TOTAL
Ex.	DENOTES EXPLANATORY
(C)	DENOTES COMMON PROPERTY
(E)	DENOTES ELECTRICAL ROOM BEING COMMON PROPERTY
(M)	DENOTES MECHANICAL ROOM BEING COMMON PROPERTY
(V)	DENOTES VESTIBULE BEING COMMON PROPERTY
(D)	DENOTES DUCT BEING COMMON PROPERTY
(S)	DENOTES STAIRS BEING COMMON PROPERTY
(EL)	DENOTES ELEVATOR BEING COMMON PROPERTY
(B-1)	DENOTES BALCONY BEING LIMITED COMMON PROPERTY FOR THE EXCLUSIVE USE OF STRATA LOT 1 (TYPICAL)
(RD-420)	DENOTES ROOF DECK BEING LIMITED COMMON PROPERTY FOR THE EXCLUSIVE USE OF STRATA LOT 420 (TYPICAL)

LCP AREAS ARE DEFINED AS TO HEIGHT BY THE CENTRE OF THE FLOOR ABOVE OR ITS EXTENSION OR WHERE THERE IS NO FLOOR ABOVE, BY THE AVERAGE HEIGHT OF A STRATA LOT WITHIN THE SAME BUILDING, UNLESS OTHERWISE NOTED

SECTION ARROWS POINT IN THE DIRECTION OF VIEW

BUTLER SUNDVICK

JESSE MORIN, BCLS
Date: SEPTEMBER 16, 2022
File: 4772\Strata\Final
Dwg: 4772-FS

www.BCStrataPlans.com

STRATA PLAN EPS8443

TOWER 2
LEVEL 28

0 5 10

SCALE 1 : 100 DISTANCES ARE IN METRES

THE INTENDED PLOT SCALE OF THIS PLAN IS 560 mm IN WIDTH BY 432 mm IN HEIGHT (C SIZE) WHEN PLOTTED AT A SCALE OF 1:100.

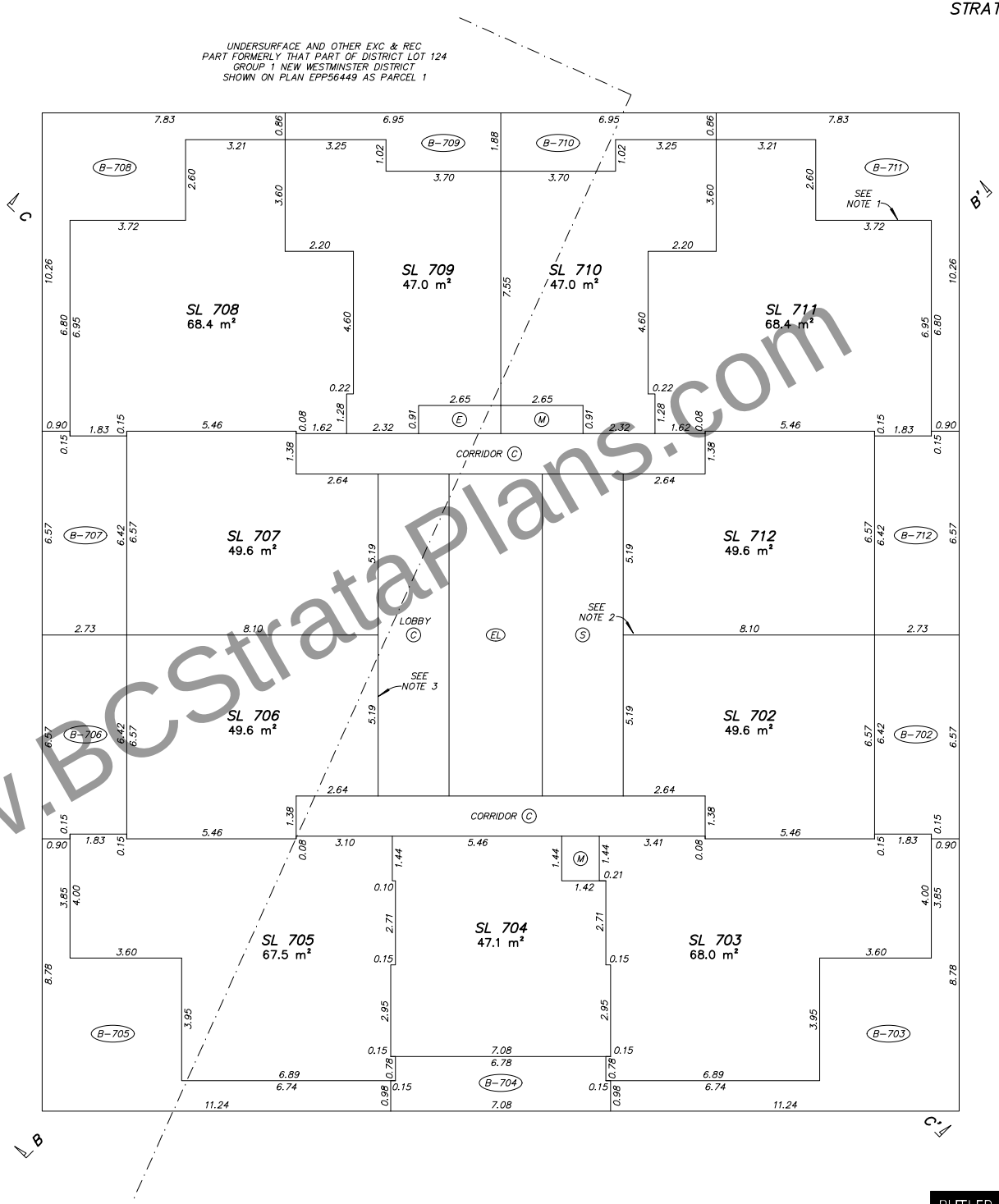

www.BCStrataPlans.com

NOTES:

1. STRATA LOT BOUNDARY EXTERIOR FACE OF EXTERIOR WALLS (TYPICAL)
2. STRATA LOT BOUNDARY CENTRELINE OF DEMISING WALLS BETWEEN STRATA LOTS (TYPICAL)
3. STRATA LOT BOUNDARY EXTERIOR FACE OF WALLS ADJACENT TO COMMON AREAS (TYPICAL)
4. STRATA LOT BOUNDARY CENTRELINE FLOOR/CEILING (TYPICAL)
5. UPPER LIMIT OF LCP IS EXTENSION OF THE CENTRELINE OF THE FLOOR/CEILING ABOVE OR WHERE THERE IS NO FLOOR ABOVE, BY THE AVERAGE HEIGHT OF A STRATA LOT WITHIN THE SAME BUILDING (TYPICAL)

LEGEND

m²	DENOTES SQUARE METRES
SL	DENOTES STRATA LOT
PT	DENOTES PART
T	DENOTES TOTAL
Ex.	DENOTES EXPLANATORY
(C)	DENOTES COMMON PROPERTY
(E)	DENOTES ELECTRICAL ROOM BEING COMMON PROPERTY
(M)	DENOTES MECHANICAL ROOM BEING COMMON PROPERTY
(V)	DENOTES VESTIBULE BEING COMMON PROPERTY
(D)	DENOTES DUCT BEING COMMON PROPERTY
(S)	DENOTES STAIRS BEING COMMON PROPERTY
(EL)	DENOTES ELEVATOR BEING COMMON PROPERTY
(B-1)	DENOTES BALCONY BEING LIMITED COMMON PROPERTY FOR THE EXCLUSIVE USE OF STRATA LOT 1 (TYPICAL)
(RD-420)	DENOTES ROOF DECK BEING LIMITED COMMON PROPERTY FOR THE EXCLUSIVE USE OF STRATA LOT 420 (TYPICAL)

LCP AREAS ARE DEFINED AS TO HEIGHT BY THE CENTRE OF THE FLOOR ABOVE OR ITS EXTENSION OR WHERE THERE IS NO FLOOR ABOVE, BY THE AVERAGE HEIGHT OF A STRATA LOT WITHIN THE SAME BUILDING, UNLESS OTHERWISE NOTED

SECTION ARROWS POINT IN THE DIRECTION OF VIEW

BUTLER SUNDVICK

JESSE MORIN, BCLS
Date: SEPTEMBER 16, 2022
File: 4772\Strata\Final
Dwg: 4772-FS

STRATA PLAN EPS8443

TOWER 2
LEVEL 29

0 5 10

SCALE 1 : 100 DISTANCES ARE IN METRES

THE INTENDED PLOT SCALE OF THIS PLAN IS 560 mm IN WIDTH BY 432 mm IN HEIGHT (C SIZE) WHEN PLOTTED AT A SCALE OF 1:100.

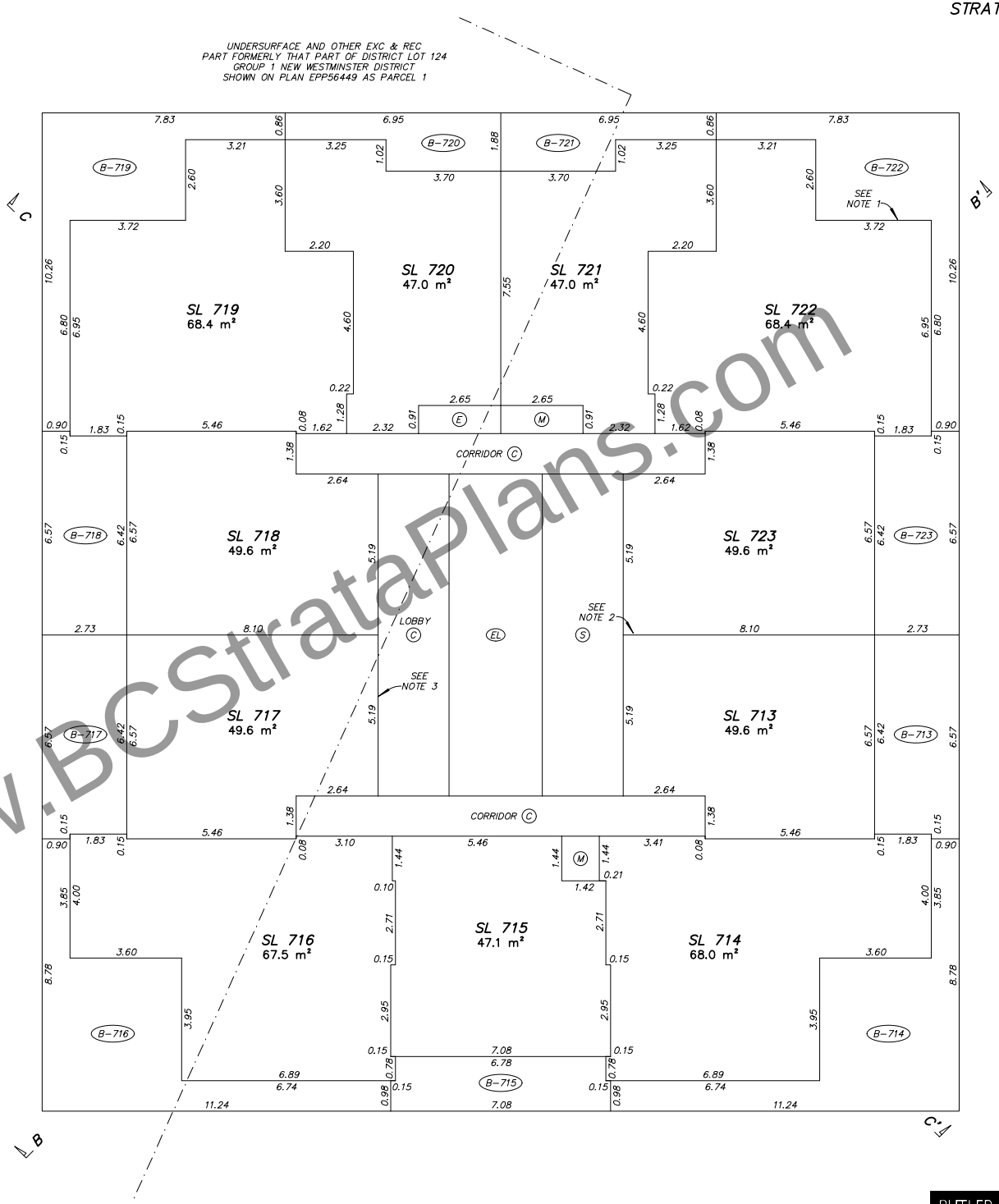

NOTES:

1. STRATA LOT BOUNDARY EXTERIOR FACE OF EXTERIOR WALLS (TYPICAL)
2. STRATA LOT BOUNDARY CENTRELINE OF DEMISING WALLS BETWEEN STRATA LOTS (TYPICAL)
3. STRATA LOT BOUNDARY EXTERIOR FACE OF WALLS ADJACENT TO COMMON AREAS (TYPICAL)
4. STRATA LOT BOUNDARY CENTRELINE FLOOR/CEILING (TYPICAL)
5. UPPER LIMIT OF LCP IS EXTENSION OF THE CENTRELINE OF THE FLOOR/CEILING ABOVE OR WHERE THERE IS NO FLOOR ABOVE, BY THE AVERAGE HEIGHT OF A STRATA LOT WITHIN THE SAME BUILDING (TYPICAL)

LEGEND

m²	DENOTES SQUARE METRES
SL	DENOTES STRATA LOT
PT	DENOTES PART
T	DENOTES TOTAL
Ex.	DENOTES EXPLANATORY
(C)	DENOTES COMMON PROPERTY
(E)	DENOTES ELECTRICAL ROOM BEING COMMON PROPERTY
(M)	DENOTES MECHANICAL ROOM BEING COMMON PROPERTY
(V)	DENOTES VESTIBULE BEING COMMON PROPERTY
(D)	DENOTES DUCT BEING COMMON PROPERTY
(S)	DENOTES STAIRS BEING COMMON PROPERTY
(EL)	DENOTES ELEVATOR BEING COMMON PROPERTY
(B-1)	DENOTES BALCONY BEING LIMITED COMMON PROPERTY FOR THE EXCLUSIVE USE OF STRATA LOT 1 (TYPICAL)
(RD-420)	DENOTES ROOF DECK BEING LIMITED COMMON PROPERTY FOR THE EXCLUSIVE USE OF STRATA LOT 420 (TYPICAL)

LCP AREAS ARE DEFINED AS TO HEIGHT BY THE CENTRE OF THE FLOOR ABOVE OR ITS EXTENSION OR WHERE THERE IS NO FLOOR ABOVE, BY THE AVERAGE HEIGHT OF A STRATA LOT WITHIN THE SAME BUILDING, UNLESS OTHERWISE NOTED

SECTION ARROWS POINT IN THE DIRECTION OF VIEW

www.BCStrataPlans.com

BUTLER SUNDVICK

JESSE MORIN, BCLS
Date: SEPTEMBER 16, 2022
File: 4772\Strata\Final
Dwg: 4772-FS

STRATA PLAN EPS8443

TOWER 2
LEVEL 30

0 5 10

SCALE 1 : 100 DISTANCES ARE IN METRES

THE INTENDED PLOT SCALE OF THIS PLAN IS 560 mm IN WIDTH BY 432 mm IN HEIGHT (C SIZE) WHEN PLOTTED AT A SCALE OF 1:100.

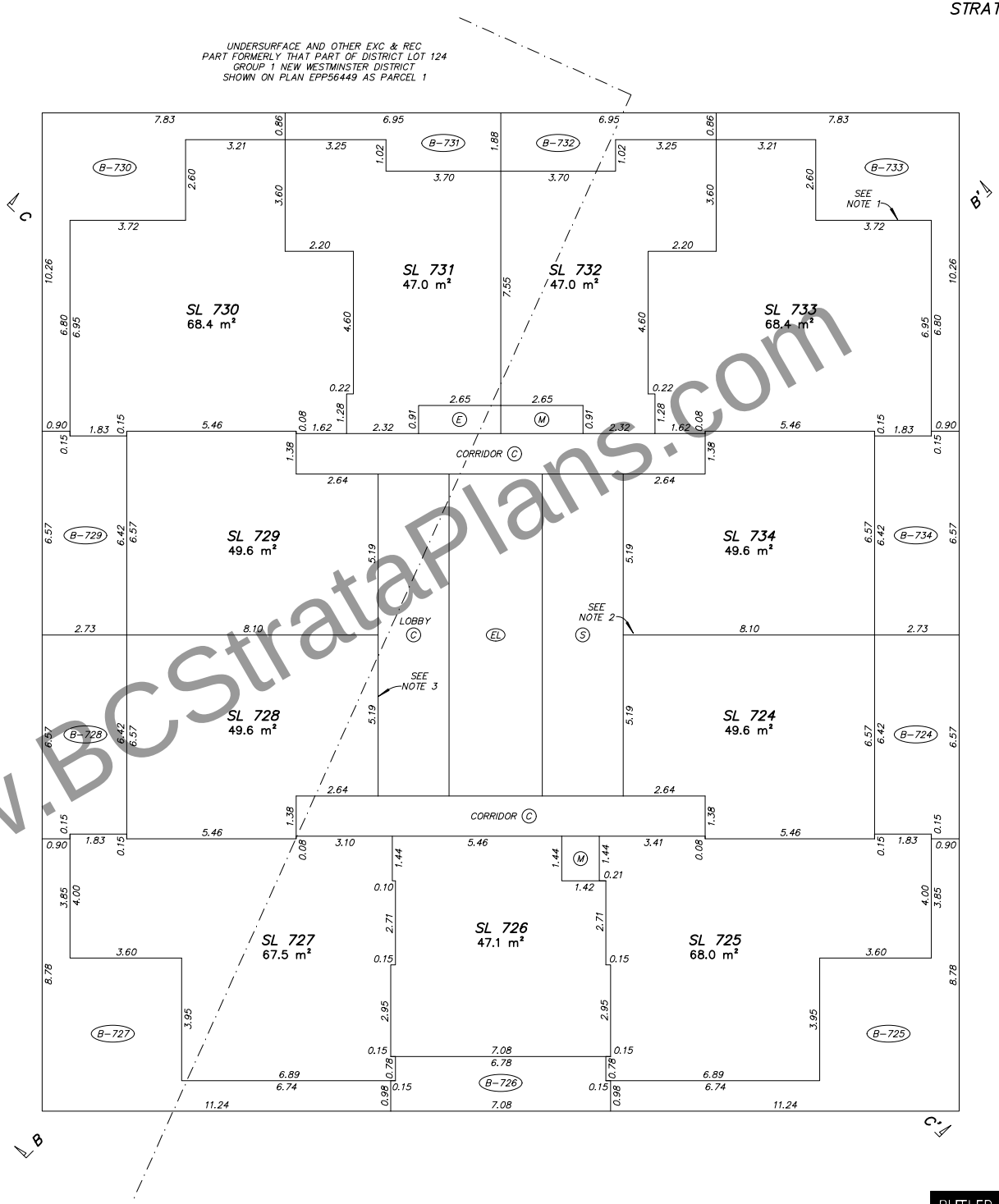

NOTES:

1. STRATA LOT BOUNDARY EXTERIOR FACE OF EXTERIOR WALLS (TYPICAL)
2. STRATA LOT BOUNDARY CENTRELINE OF DEMISING WALLS BETWEEN STRATA LOTS (TYPICAL)
3. STRATA LOT BOUNDARY EXTERIOR FACE OF WALLS ADJACENT TO COMMON AREAS (TYPICAL)
4. STRATA LOT BOUNDARY CENTRELINE FLOOR/CEILING (TYPICAL)
5. UPPER LIMIT OF LCP IS EXTENSION OF THE CENTRELINE OF THE FLOOR/CEILING ABOVE OR WHERE THERE IS NO FLOOR ABOVE, BY THE AVERAGE HEIGHT OF A STRATA LOT WITHIN THE SAME BUILDING (TYPICAL)

LEGEND

m²	DENOTES SQUARE METRES
SL	DENOTES STRATA LOT
PT	DENOTES PART
T	DENOTES TOTAL
Ex.	DENOTES EXPLANATORY
(C)	DENOTES COMMON PROPERTY
(E)	DENOTES ELECTRICAL ROOM BEING COMMON PROPERTY
(M)	DENOTES MECHANICAL ROOM BEING COMMON PROPERTY
(V)	DENOTES VESTIBULE BEING COMMON PROPERTY
(D)	DENOTES DUCT BEING COMMON PROPERTY
(S)	DENOTES STAIRS BEING COMMON PROPERTY
(EL)	DENOTES ELEVATOR BEING COMMON PROPERTY
(B-1)	DENOTES BALCONY BEING LIMITED COMMON PROPERTY FOR THE EXCLUSIVE USE OF STRATA LOT 1 (TYPICAL)
(RD-420)	DENOTES ROOF DECK BEING LIMITED COMMON PROPERTY FOR THE EXCLUSIVE USE OF STRATA LOT 420 (TYPICAL)

LCP AREAS ARE DEFINED AS TO HEIGHT BY THE CENTRE OF THE FLOOR ABOVE OR ITS EXTENSION OR WHERE THERE IS NO FLOOR ABOVE, BY THE AVERAGE HEIGHT OF A STRATA LOT WITHIN THE SAME BUILDING, UNLESS OTHERWISE NOTED

SECTION ARROWS POINT IN THE DIRECTION OF VIEW

BUTLER SUNDVICK

JESSE MORIN, BCLS
Date: SEPTEMBER 16, 2022
File: 4772\Strata\Final
Dwg: 4772-FS

www.BCStrataPlans.com

STRATA PLAN EPS8443

TOWER 2
LEVEL 31

0 5 10

SCALE 1 : 100 DISTANCES ARE IN METRES

THE INTENDED PLOT SCALE OF THIS PLAN IS 560 mm IN WIDTH BY 432 mm IN HEIGHT (C SIZE) WHEN PLOTTED AT A SCALE OF 1:100.

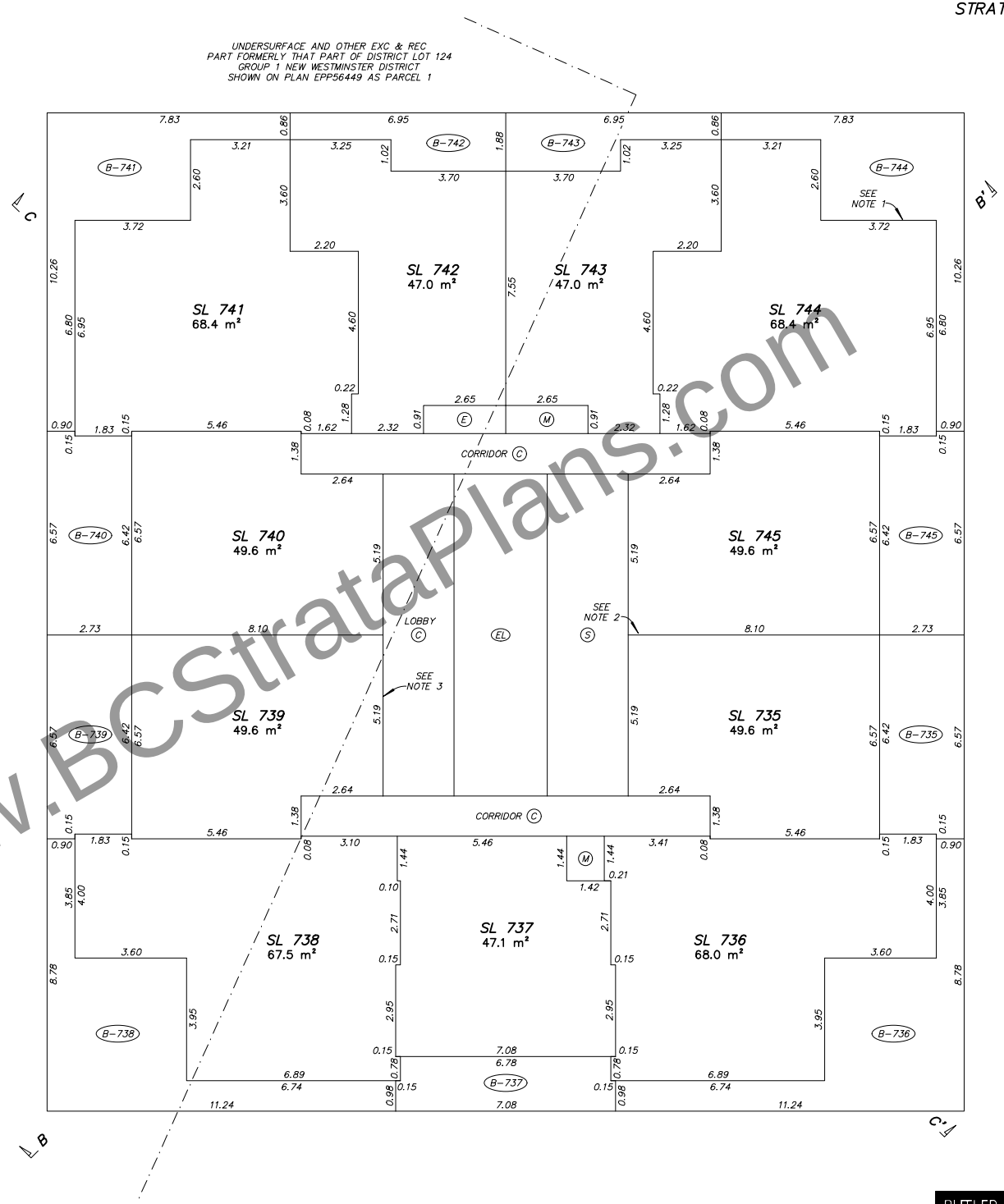

NOTES:

1. STRATA LOT BOUNDARY EXTERIOR FACE OF EXTERIOR WALLS (TYPICAL)
2. STRATA LOT BOUNDARY CENTRELINE OF DEMISING WALLS BETWEEN STRATA LOTS (TYPICAL)
3. STRATA LOT BOUNDARY EXTERIOR FACE OF WALLS ADJACENT TO COMMON AREAS (TYPICAL)
4. STRATA LOT BOUNDARY CENTRELINE FLOOR/CEILING (TYPICAL)
5. UPPER LIMIT OF LCP IS EXTENSION OF THE CENTRELINE OF THE FLOOR/CEILING ABOVE OR WHERE THERE IS NO FLOOR ABOVE, BY THE AVERAGE HEIGHT OF A STRATA LOT WITHIN THE SAME BUILDING (TYPICAL)

LEGEND

m²	DENOTES SQUARE METRES
SL	DENOTES STRATA LOT
PT	DENOTES PART
T	DENOTES TOTAL
Ex.	DENOTES EXPLANATORY
(C)	DENOTES COMMON PROPERTY
(E)	DENOTES ELECTRICAL ROOM BEING COMMON PROPERTY
(M)	DENOTES MECHANICAL ROOM BEING COMMON PROPERTY
(V)	DENOTES VESTIBULE BEING COMMON PROPERTY
(D)	DENOTES DUCT BEING COMMON PROPERTY
(S)	DENOTES STAIRS BEING COMMON PROPERTY
(EL)	DENOTES ELEVATOR BEING COMMON PROPERTY
(B-1)	DENOTES BALCONY BEING LIMITED COMMON PROPERTY FOR THE EXCLUSIVE USE OF STRATA LOT 1 (TYPICAL)
(RD-420)	DENOTES ROOF DECK BEING LIMITED COMMON PROPERTY FOR THE EXCLUSIVE USE OF STRATA LOT 420 (TYPICAL)

LCP AREAS ARE DEFINED AS TO HEIGHT BY THE CENTRE OF THE FLOOR ABOVE OR ITS EXTENSION OR WHERE THERE IS NO FLOOR ABOVE, BY THE AVERAGE HEIGHT OF A STRATA LOT WITHIN THE SAME BUILDING, UNLESS OTHERWISE NOTED

SECTION ARROWS POINT IN THE DIRECTION OF VIEW

www.BCStrataPlans.com

BUTLER SUNDVICK

JESSE MORIN, BCLS
Date: SEPTEMBER 16, 2022
File: 4772\Strata\Final
Dwg: 4772-FS

STRATA PLAN EPS8443

TOWER 2
LEVEL 32

0 5 10

SCALE 1 : 100 DISTANCES ARE IN METRES

THE INTENDED PLOT SCALE OF THIS PLAN IS 560 mm IN WIDTH BY 432 mm IN HEIGHT (C SIZE) WHEN PLOTTED AT A SCALE OF 1:100.

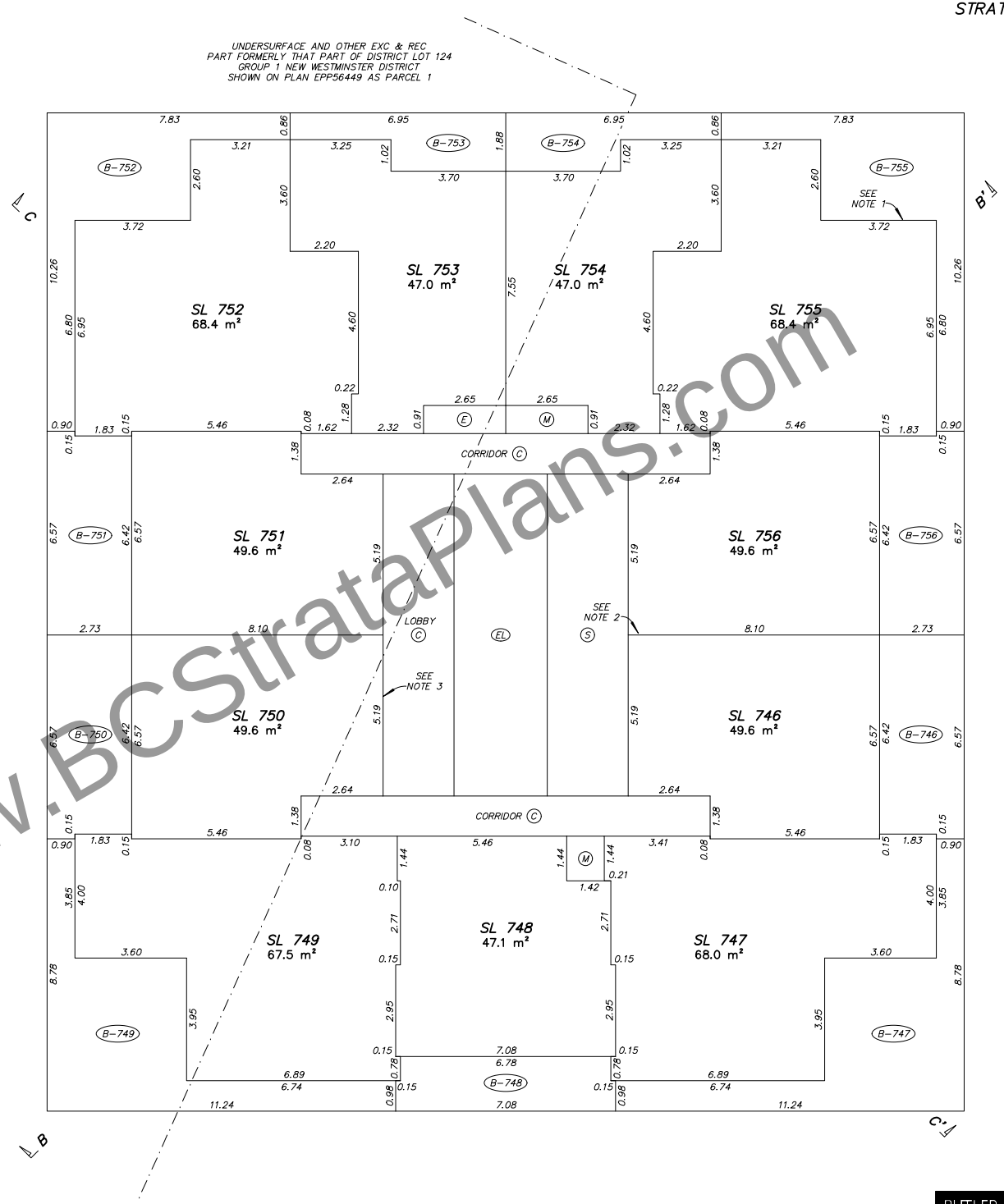

NOTES:

1. STRATA LOT BOUNDARY EXTERIOR FACE OF EXTERIOR WALLS (TYPICAL)
2. STRATA LOT BOUNDARY CENTRELINE OF DEMISING WALLS BETWEEN STRATA LOTS (TYPICAL)
3. STRATA LOT BOUNDARY EXTERIOR FACE OF WALLS ADJACENT TO COMMON AREAS (TYPICAL)
4. STRATA LOT BOUNDARY CENTRELINE FLOOR/CEILING (TYPICAL)
5. UPPER LIMIT OF LCP IS EXTENSION OF THE CENTRELINE OF THE FLOOR/CEILING ABOVE OR WHERE THERE IS NO FLOOR ABOVE, BY THE AVERAGE HEIGHT OF A STRATA LOT WITHIN THE SAME BUILDING (TYPICAL)

LEGEND

m²	DENOTES SQUARE METRES
SL	DENOTES STRATA LOT
PT	DENOTES PART
T	DENOTES TOTAL
Ex.	DENOTES EXPLANATORY
(C)	DENOTES COMMON PROPERTY
(E)	DENOTES ELECTRICAL ROOM BEING COMMON PROPERTY
(M)	DENOTES MECHANICAL ROOM BEING COMMON PROPERTY
(V)	DENOTES VESTIBULE BEING COMMON PROPERTY
(D)	DENOTES DUCT BEING COMMON PROPERTY
(S)	DENOTES STAIRS BEING COMMON PROPERTY
(EL)	DENOTES ELEVATOR BEING COMMON PROPERTY
(B-1)	DENOTES BALCONY BEING LIMITED COMMON PROPERTY FOR THE EXCLUSIVE USE OF STRATA LOT 1 (TYPICAL)
(RD-420)	DENOTES ROOF DECK BEING LIMITED COMMON PROPERTY FOR THE EXCLUSIVE USE OF STRATA LOT 420 (TYPICAL)

LCP AREAS ARE DEFINED AS TO HEIGHT BY THE CENTRE OF THE FLOOR ABOVE OR ITS EXTENSION OR WHERE THERE IS NO FLOOR ABOVE, BY THE AVERAGE HEIGHT OF A STRATA LOT WITHIN THE SAME BUILDING, UNLESS OTHERWISE NOTED

SECTION ARROWS POINT IN THE DIRECTION OF VIEW

BUTLER SUNDVICK

JESSE MORIN, BCLS
Date: SEPTEMBER 16, 2022
File: 4772\Strata\Final
Dwg: 4772-FS

www.BCStrataPlans.com

STRATA PLAN EPS8443

TOWER 2
LEVEL 33

0 5 10

SCALE 1 : 100 DISTANCES ARE IN METRES

THE INTENDED PLOT SCALE OF THIS PLAN IS 560 mm IN WIDTH BY 432 mm IN HEIGHT (C SIZE) WHEN PLOTTED AT A SCALE OF 1:100.

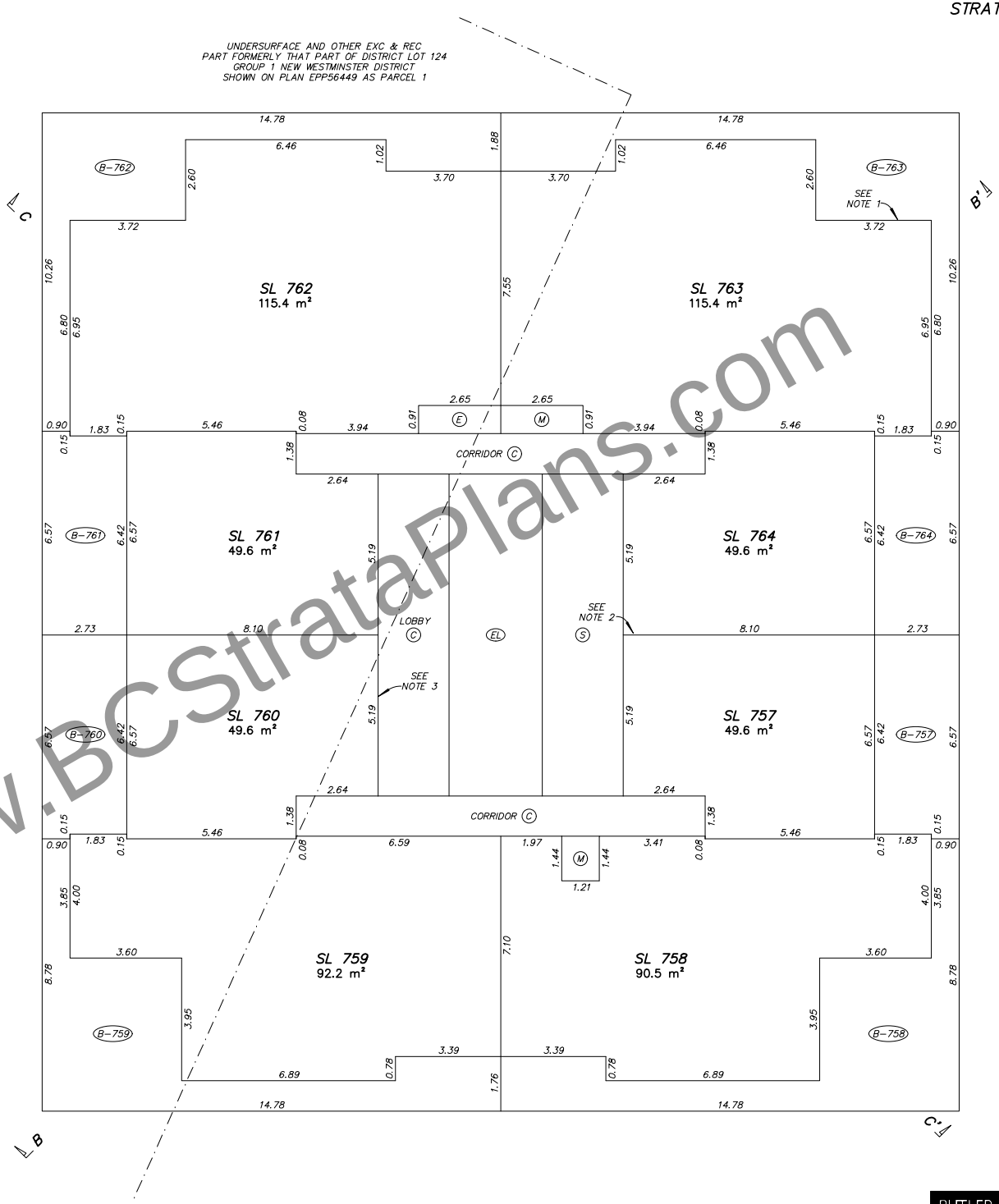

NOTES:

1. STRATA LOT BOUNDARY EXTERIOR FACE OF EXTERIOR WALLS (TYPICAL)
2. STRATA LOT BOUNDARY CENTRELINE OF DEMISING WALLS BETWEEN STRATA LOTS (TYPICAL)
3. STRATA LOT BOUNDARY EXTERIOR FACE OF WALLS ADJACENT TO COMMON AREAS (TYPICAL)
4. STRATA LOT BOUNDARY CENTRELINE FLOOR/CEILING (TYPICAL)
5. UPPER LIMIT OF LCP IS EXTENSION OF THE CENTRELINE OF THE FLOOR/CEILING ABOVE OR WHERE THERE IS NO FLOOR ABOVE, BY THE AVERAGE HEIGHT OF A STRATA LOT WITHIN THE SAME BUILDING (TYPICAL)

LEGEND

m²	DENOTES SQUARE METRES
SL	DENOTES STRATA LOT
PT	DENOTES PART
T	DENOTES TOTAL
Ex.	DENOTES EXPLANATORY
(C)	DENOTES COMMON PROPERTY
(E)	DENOTES ELECTRICAL ROOM BEING COMMON PROPERTY
(M)	DENOTES MECHANICAL ROOM BEING COMMON PROPERTY
(V)	DENOTES VESTIBULE BEING COMMON PROPERTY
(D)	DENOTES DUCT BEING COMMON PROPERTY
(S)	DENOTES STAIRS BEING COMMON PROPERTY
(EL)	DENOTES ELEVATOR BEING COMMON PROPERTY
(B-1)	DENOTES BALCONY BEING LIMITED COMMON PROPERTY FOR THE EXCLUSIVE USE OF STRATA LOT 1 (TYPICAL)
(RD-420)	DENOTES ROOF DECK BEING LIMITED COMMON PROPERTY FOR THE EXCLUSIVE USE OF STRATA LOT 420 (TYPICAL)

LCP AREAS ARE DEFINED AS TO HEIGHT BY THE CENTRE OF THE FLOOR ABOVE OR ITS EXTENSION OR WHERE THERE IS NO FLOOR ABOVE, BY THE AVERAGE HEIGHT OF A STRATA LOT WITHIN THE SAME BUILDING, UNLESS OTHERWISE NOTED

SECTION ARROWS POINT IN THE DIRECTION OF VIEW

www.BCStrataPlans.com

BUTLER SUNDVICK

JESSE MORIN, BCLS
Date: SEPTEMBER 16, 2022
File: 4772\Strata\Final
Dwg: 4772-FS

STRATA PLAN EPS8443

TOWER 2
LEVEL 34

0 5 10

SCALE 1 : 100 DISTANCES ARE IN METRES

THE INTENDED PLOT SCALE OF THIS PLAN IS 560 mm IN WIDTH BY 432 mm IN HEIGHT (C SIZE) WHEN PLOTTED AT A SCALE OF 1:100.

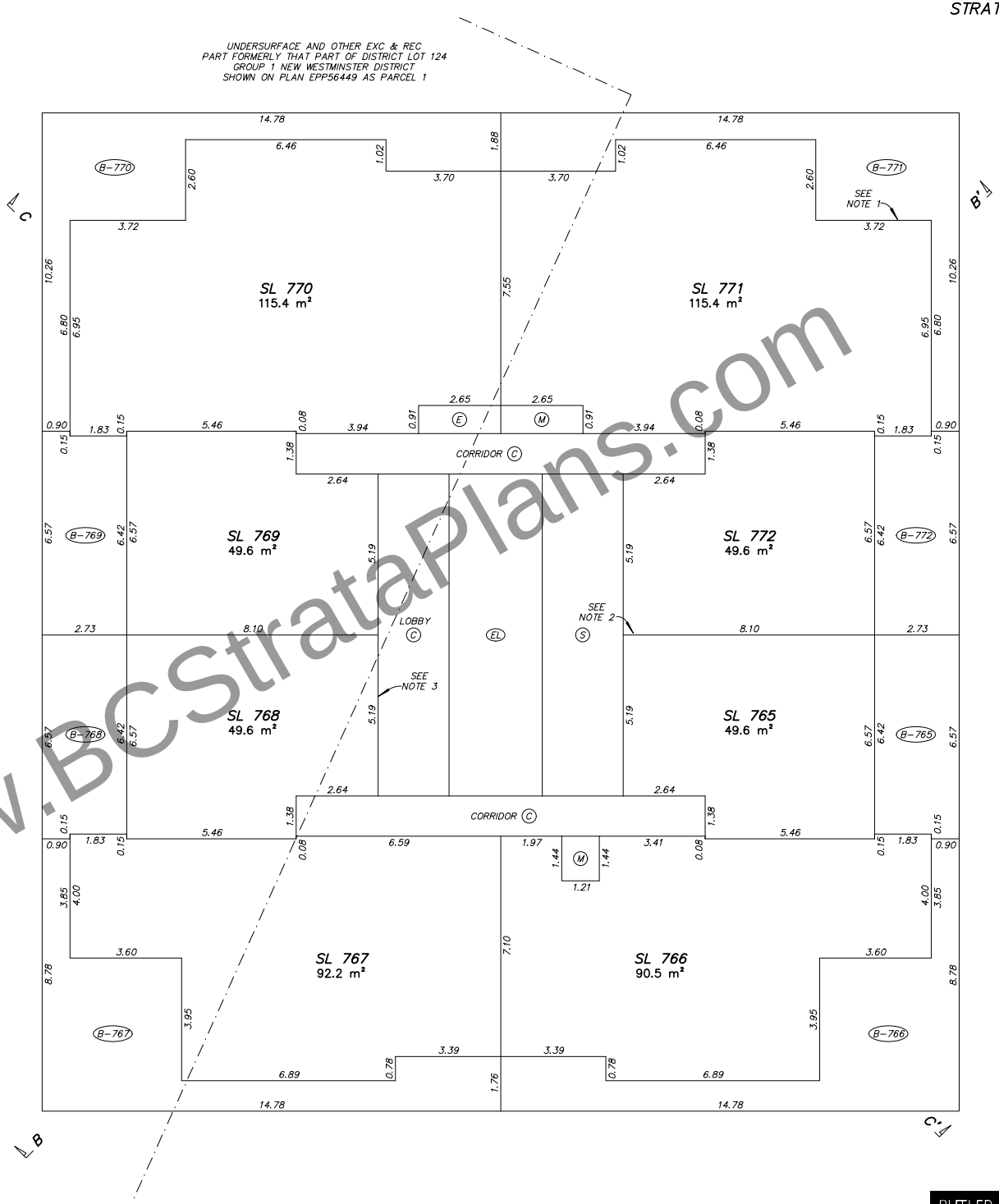

NOTES:

1. STRATA LOT BOUNDARY EXTERIOR FACE OF EXTERIOR WALLS (TYPICAL)
2. STRATA LOT BOUNDARY CENTRELINE OF DEMISING WALLS BETWEEN STRATA LOTS (TYPICAL)
3. STRATA LOT BOUNDARY EXTERIOR FACE OF WALLS ADJACENT TO COMMON AREAS (TYPICAL)
4. STRATA LOT BOUNDARY CENTRELINE FLOOR/CEILING (TYPICAL)
5. UPPER LIMIT OF LCP IS EXTENSION OF THE CENTRELINE OF THE FLOOR/CEILING ABOVE OR WHERE THERE IS NO FLOOR ABOVE, BY THE AVERAGE HEIGHT OF A STRATA LOT WITHIN THE SAME BUILDING (TYPICAL)

LEGEND

m²	DENOTES SQUARE METRES
SL	DENOTES STRATA LOT
PT	DENOTES PART
T	DENOTES TOTAL
Ex.	DENOTES EXPLANATORY
(C)	DENOTES COMMON PROPERTY
(E)	DENOTES ELECTRICAL ROOM BEING COMMON PROPERTY
(M)	DENOTES MECHANICAL ROOM BEING COMMON PROPERTY
(V)	DENOTES VESTIBULE BEING COMMON PROPERTY
(D)	DENOTES DUCT BEING COMMON PROPERTY
(S)	DENOTES STAIRS BEING COMMON PROPERTY
(EL)	DENOTES ELEVATOR BEING COMMON PROPERTY
(B-1)	DENOTES BALCONY BEING LIMITED COMMON PROPERTY FOR THE EXCLUSIVE USE OF STRATA LOT 1 (TYPICAL)
(RD-420)	DENOTES ROOF DECK BEING LIMITED COMMON PROPERTY FOR THE EXCLUSIVE USE OF STRATA LOT 420 (TYPICAL)

LCP AREAS ARE DEFINED AS TO HEIGHT BY THE CENTRE OF THE FLOOR ABOVE OR ITS EXTENSION OR WHERE THERE IS NO FLOOR ABOVE, BY THE AVERAGE HEIGHT OF A STRATA LOT WITHIN THE SAME BUILDING, UNLESS OTHERWISE NOTED

SECTION ARROWS POINT IN THE DIRECTION OF VIEW

www.BCStrataPlans.com

BUTLER SUNDVICK

JESSE MORIN, BCLS
Date: SEPTEMBER 16, 2022
File: 4772\Strata\Final
Dwg: 4772-FS

STRATA PLAN EPS8443

TOWER 2
LEVEL 35

0 5 10

SCALE 1 : 100 DISTANCES ARE IN METRES

THE INTENDED PLOT SCALE OF THIS PLAN IS 560 mm IN WIDTH BY 432 mm IN HEIGHT (C SIZE) WHEN PLOTTED AT A SCALE OF 1:100.

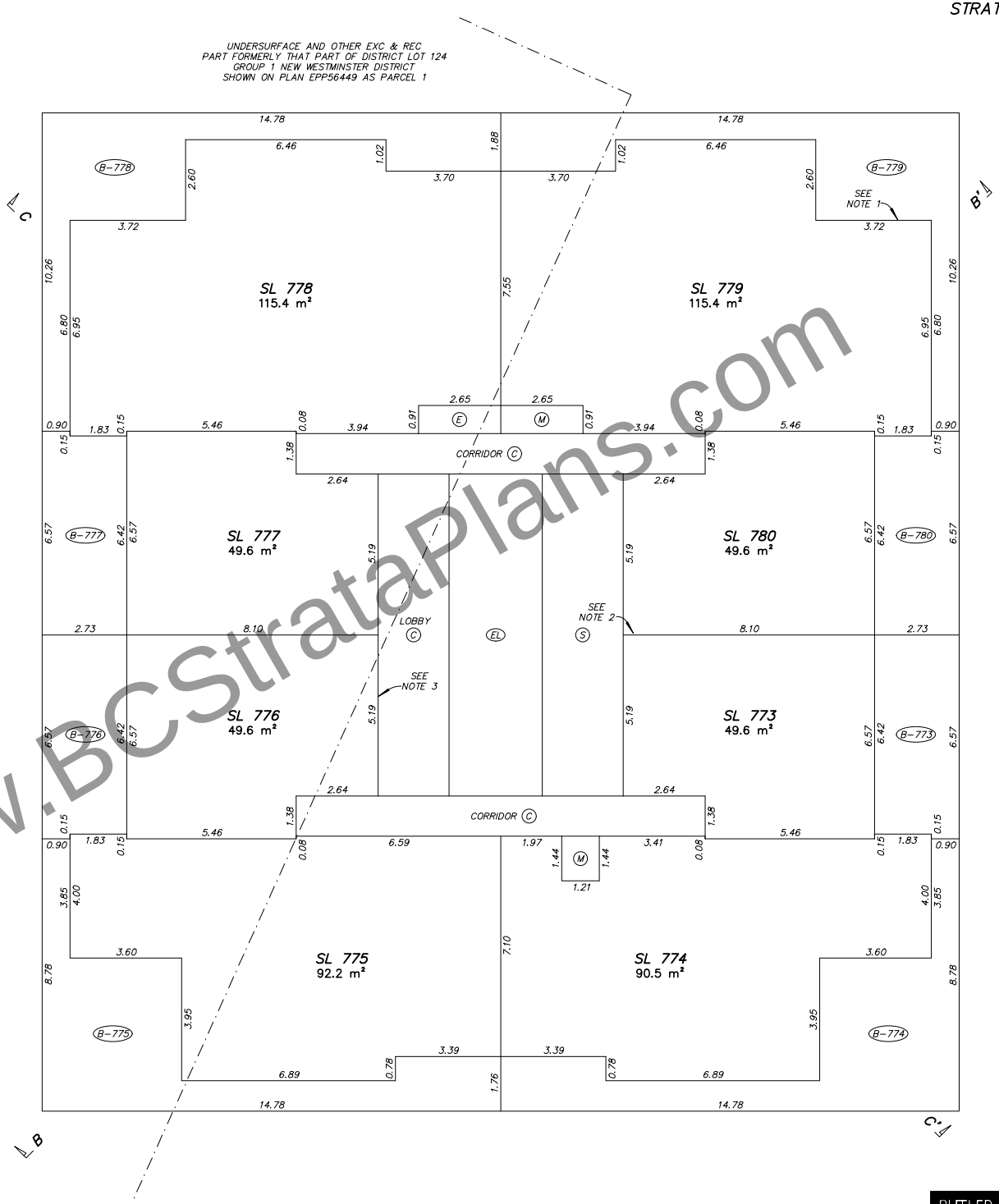

NOTES:

1. STRATA LOT BOUNDARY EXTERIOR FACE OF EXTERIOR WALLS (TYPICAL)
2. STRATA LOT BOUNDARY CENTRELINE OF DEMISING WALLS BETWEEN STRATA LOTS (TYPICAL)
3. STRATA LOT BOUNDARY EXTERIOR FACE OF WALLS ADJACENT TO COMMON AREAS (TYPICAL)
4. STRATA LOT BOUNDARY CENTRELINE FLOOR/CEILING (TYPICAL)
5. UPPER LIMIT OF LCP IS EXTENSION OF THE CENTRELINE OF THE FLOOR/CEILING ABOVE OR WHERE THERE IS NO FLOOR ABOVE, BY THE AVERAGE HEIGHT OF A STRATA LOT WITHIN THE SAME BUILDING (TYPICAL)

LEGEND

m²	DENOTES SQUARE METRES
SL	DENOTES STRATA LOT
PT	DENOTES PART
T	DENOTES TOTAL
Ex.	DENOTES EXPLANATORY
(C)	DENOTES COMMON PROPERTY
(E)	DENOTES ELECTRICAL ROOM BEING COMMON PROPERTY
(M)	DENOTES MECHANICAL ROOM BEING COMMON PROPERTY
(V)	DENOTES VESTIBULE BEING COMMON PROPERTY
(D)	DENOTES DUCT BEING COMMON PROPERTY
(S)	DENOTES STAIRS BEING COMMON PROPERTY
(EL)	DENOTES ELEVATOR BEING COMMON PROPERTY
(B-1)	DENOTES BALCONY BEING LIMITED COMMON PROPERTY FOR THE EXCLUSIVE USE OF STRATA LOT 1 (TYPICAL)
(RD-420)	DENOTES ROOF DECK BEING LIMITED COMMON PROPERTY FOR THE EXCLUSIVE USE OF STRATA LOT 420 (TYPICAL)

LCP AREAS ARE DEFINED AS TO HEIGHT BY THE CENTRE OF THE FLOOR ABOVE OR ITS EXTENSION OR WHERE THERE IS NO FLOOR ABOVE, BY THE AVERAGE HEIGHT OF A STRATA LOT WITHIN THE SAME BUILDING, UNLESS OTHERWISE NOTED

SECTION ARROWS POINT IN THE DIRECTION OF VIEW

www.BCStrataPlans.com

BUTLER SUNDVICK

JESSE MORIN, BCLS
Date: SEPTEMBER 16, 2022
File: 4772\Strata\Final
Dwg: 4772-FS

STRATA PLAN EPS8443

TOWER 2
LEVEL 36

0 5 10

SCALE 1 : 100 DISTANCES ARE IN METRES

THE INTENDED PLOT SCALE OF THIS PLAN IS 560 mm IN WIDTH BY 432 mm IN HEIGHT (C SIZE) WHEN PLOTTED AT A SCALE OF 1:100.

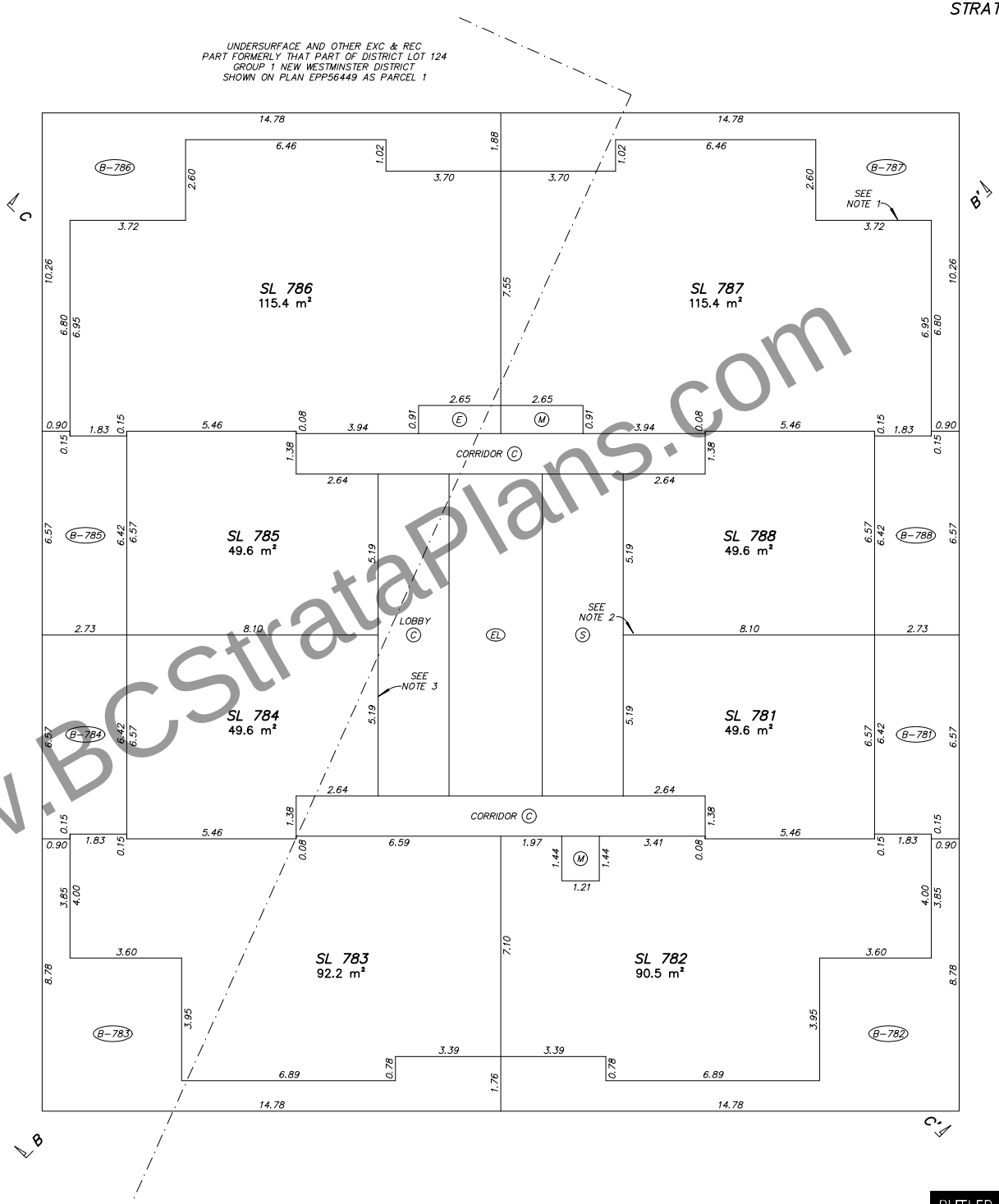

NOTES:

1. STRATA LOT BOUNDARY EXTERIOR FACE OF EXTERIOR WALLS (TYPICAL)
2. STRATA LOT BOUNDARY CENTRELINE OF DEMISING WALLS BETWEEN STRATA LOTS (TYPICAL)
3. STRATA LOT BOUNDARY EXTERIOR FACE OF WALLS ADJACENT TO COMMON AREAS (TYPICAL)
4. STRATA LOT BOUNDARY CENTRELINE FLOOR/CEILING (TYPICAL)
5. UPPER LIMIT OF LCP IS EXTENSION OF THE CENTRELINE OF THE FLOOR/CEILING ABOVE OR WHERE THERE IS NO FLOOR ABOVE, BY THE AVERAGE HEIGHT OF A STRATA LOT WITHIN THE SAME BUILDING (TYPICAL)

LEGEND

m²	DENOTES SQUARE METRES
SL	DENOTES STRATA LOT
PT	DENOTES PART
T	DENOTES TOTAL
Ex.	DENOTES EXPLANATORY
(C)	DENOTES COMMON PROPERTY
(E)	DENOTES ELECTRICAL ROOM BEING COMMON PROPERTY
(M)	DENOTES MECHANICAL ROOM BEING COMMON PROPERTY
(V)	DENOTES VESTIBULE BEING COMMON PROPERTY
(D)	DENOTES DUCT BEING COMMON PROPERTY
(S)	DENOTES STAIRS BEING COMMON PROPERTY
(EL)	DENOTES ELEVATOR BEING COMMON PROPERTY
(B-1)	DENOTES BALCONY BEING LIMITED COMMON PROPERTY FOR THE EXCLUSIVE USE OF STRATA LOT 1 (TYPICAL)
(RD-420)	DENOTES ROOF DECK BEING LIMITED COMMON PROPERTY FOR THE EXCLUSIVE USE OF STRATA LOT 420 (TYPICAL)

LCP AREAS ARE DEFINED AS TO HEIGHT BY THE CENTRE OF THE FLOOR ABOVE OR ITS EXTENSION OR WHERE THERE IS NO FLOOR ABOVE, BY THE AVERAGE HEIGHT OF A STRATA LOT WITHIN THE SAME BUILDING, UNLESS OTHERWISE NOTED

SECTION ARROWS POINT IN THE DIRECTION OF VIEW

www.BCStrataPlans.com

BUTLER SUNDVICK

JESSE MORIN, BCLS
Date: SEPTEMBER 16, 2022
File: 4772\Strata\Final
Dwg: 4772-FS

STRATA PLAN EPS8443

TOWER 2
LEVEL 37

0 5 10

SCALE 1 : 100 DISTANCES ARE IN METRES

THE INTENDED PLOT SCALE OF THIS PLAN IS 560 mm IN WIDTH BY 432 mm IN HEIGHT (C SIZE) WHEN PLOTTED AT A SCALE OF 1:100.

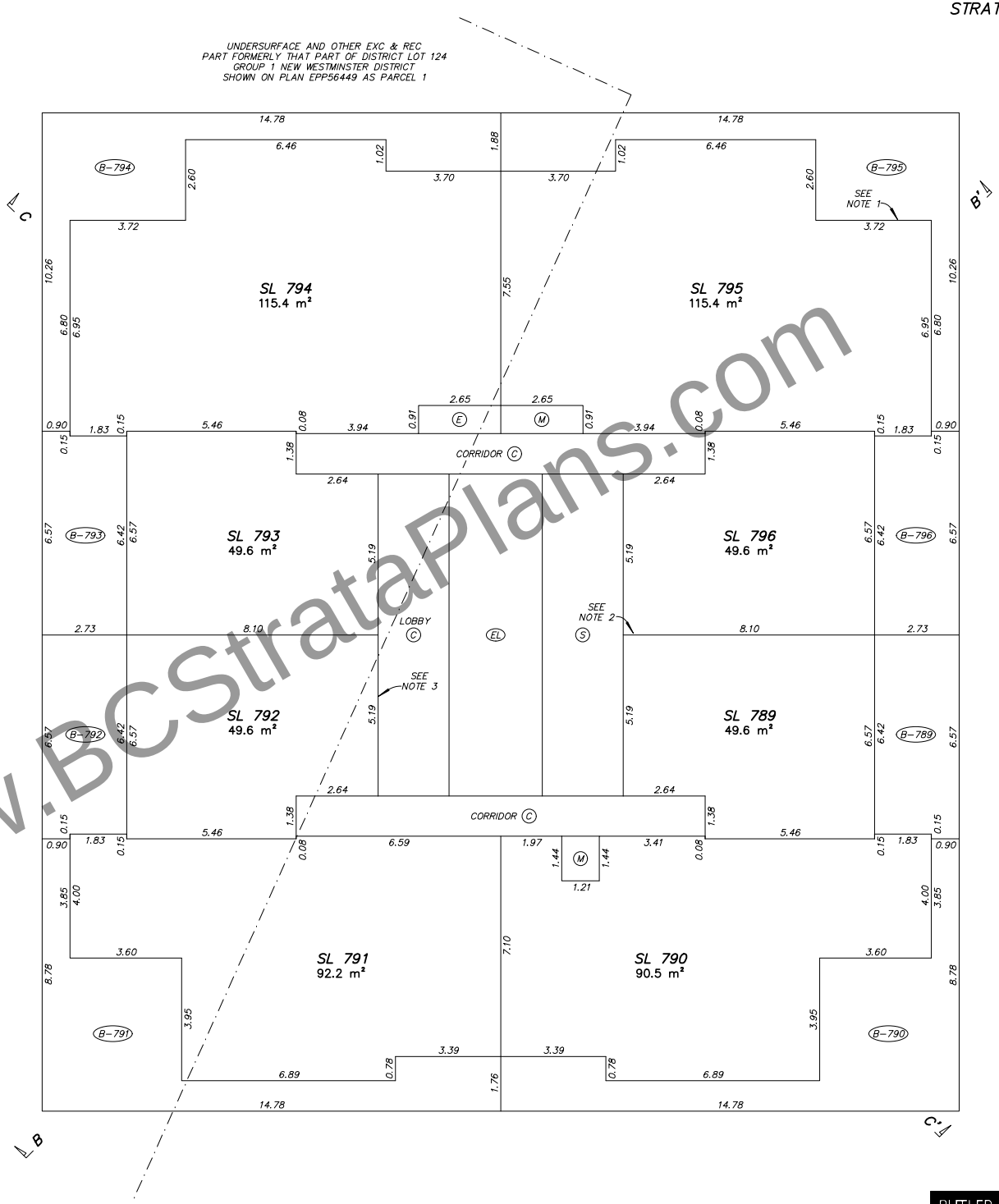

NOTES:

1. STRATA LOT BOUNDARY EXTERIOR FACE OF EXTERIOR WALLS (TYPICAL)
2. STRATA LOT BOUNDARY CENTRELINE OF DEMISING WALLS BETWEEN STRATA LOTS (TYPICAL)
3. STRATA LOT BOUNDARY EXTERIOR FACE OF WALLS ADJACENT TO COMMON AREAS (TYPICAL)
4. STRATA LOT BOUNDARY CENTRELINE FLOOR/CEILING (TYPICAL)
5. UPPER LIMIT OF LCP IS EXTENSION OF THE CENTRELINE OF THE FLOOR/CEILING ABOVE OR WHERE THERE IS NO FLOOR ABOVE, BY THE AVERAGE HEIGHT OF A STRATA LOT WITHIN THE SAME BUILDING (TYPICAL)

LEGEND

m²	DENOTES SQUARE METRES
SL	DENOTES STRATA LOT
PT	DENOTES PART
T	DENOTES TOTAL
Ex.	DENOTES EXPLANATORY
(C)	DENOTES COMMON PROPERTY
(E)	DENOTES ELECTRICAL ROOM BEING COMMON PROPERTY
(M)	DENOTES MECHANICAL ROOM BEING COMMON PROPERTY
(V)	DENOTES VESTIBULE BEING COMMON PROPERTY
(D)	DENOTES DUCT BEING COMMON PROPERTY
(S)	DENOTES STAIRS BEING COMMON PROPERTY
(EL)	DENOTES ELEVATOR BEING COMMON PROPERTY
(B-1)	DENOTES BALCONY BEING LIMITED COMMON PROPERTY FOR THE EXCLUSIVE USE OF STRATA LOT 1 (TYPICAL)
(RD-420)	DENOTES ROOF DECK BEING LIMITED COMMON PROPERTY FOR THE EXCLUSIVE USE OF STRATA LOT 420 (TYPICAL)

LCP AREAS ARE DEFINED AS TO HEIGHT BY THE CENTRE OF THE FLOOR ABOVE OR ITS EXTENSION OR WHERE THERE IS NO FLOOR ABOVE, BY THE AVERAGE HEIGHT OF A STRATA LOT WITHIN THE SAME BUILDING, UNLESS OTHERWISE NOTED

SECTION ARROWS POINT IN THE DIRECTION OF VIEW

www.BCStrataPlans.com

BUTLER SUNDVICK

JESSE MORIN, BCLS
Date: SEPTEMBER 16, 2022
File: 4772\Strata\Final
Dwg: 4772-FS

STRATA PLAN EPS8443

TOWER 2
LEVEL 38

0 5 10

SCALE 1 : 100 DISTANCES ARE IN METRES

THE INTENDED PLOT SCALE OF THIS PLAN IS 560 mm IN WIDTH BY 432 mm IN HEIGHT (C SIZE) WHEN PLOTTED AT A SCALE OF 1:100.

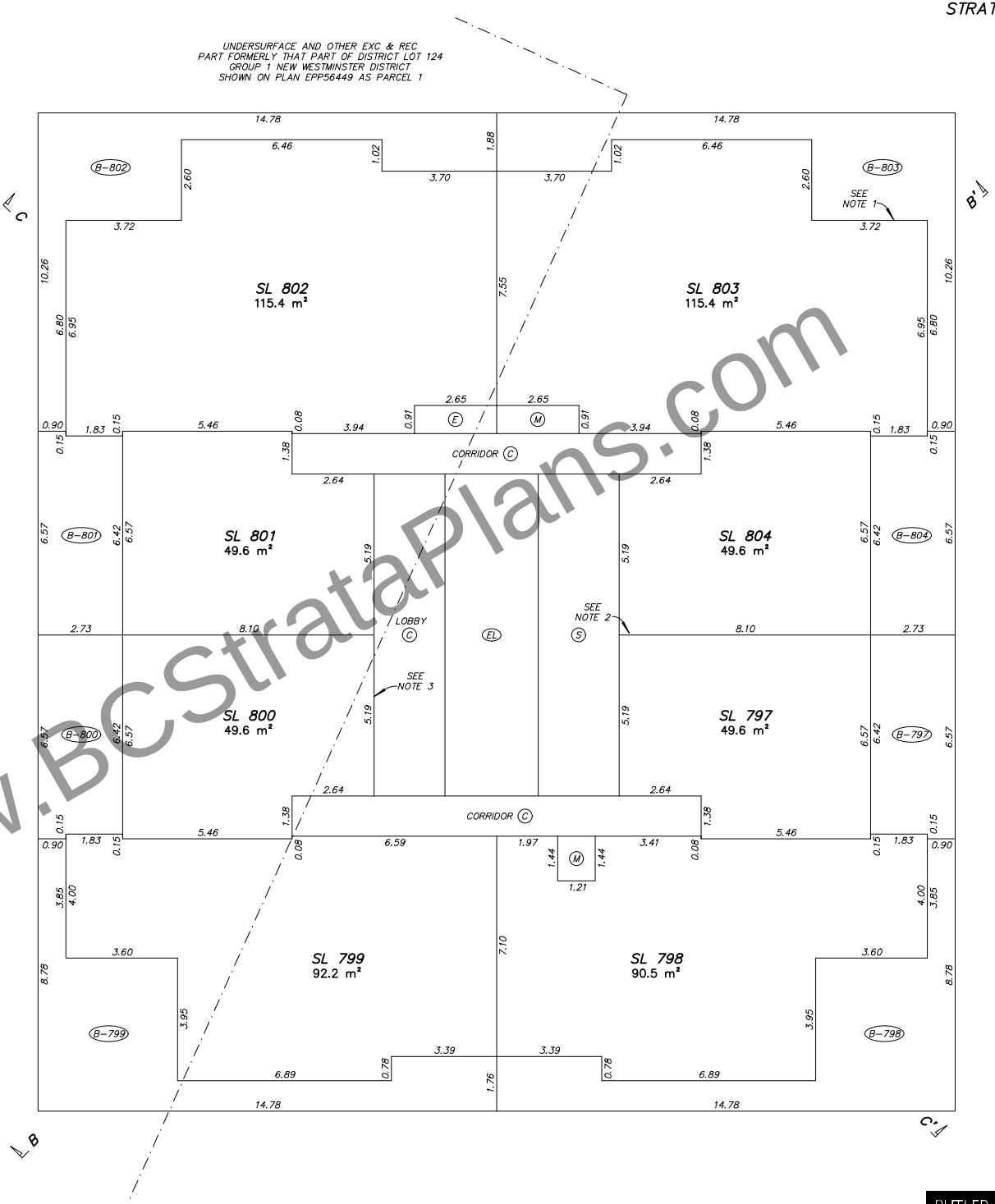

NOTES:

1. STRATA LOT BOUNDARY EXTERIOR FACE OF EXTERIOR WALLS (TYPICAL)
2. STRATA LOT BOUNDARY CENTRELINE OF DEMISING WALLS BETWEEN STRATA LOTS (TYPICAL)
3. STRATA LOT BOUNDARY EXTERIOR FACE OF WALLS ADJACENT TO COMMON AREAS (TYPICAL)
4. STRATA LOT BOUNDARY CENTRELINE FLOOR/CEILING (TYPICAL)
5. UPPER LIMIT OF LCP IS EXTENSION OF THE CENTRELINE OF THE FLOOR/CEILING ABOVE OR WHERE THERE IS NO FLOOR ABOVE, BY THE AVERAGE HEIGHT OF A STRATA LOT WITHIN THE SAME BUILDING (TYPICAL)

LEGEND

m²	DENOTES SQUARE METRES
SL	DENOTES STRATA LOT
PT	DENOTES PART
T	DENOTES TOTAL
Ex.	DENOTES EXPLANATORY
(C)	DENOTES COMMON PROPERTY
(E)	DENOTES ELECTRICAL ROOM BEING COMMON PROPERTY
(M)	DENOTES MECHANICAL ROOM BEING COMMON PROPERTY
(V)	DENOTES VESTIBULE BEING COMMON PROPERTY
(D)	DENOTES DUCT BEING COMMON PROPERTY
(S)	DENOTES STAIRS BEING COMMON PROPERTY
(EL)	DENOTES ELEVATOR BEING COMMON PROPERTY
(B-1)	DENOTES BALCONY BEING LIMITED COMMON PROPERTY FOR THE EXCLUSIVE USE OF STRATA LOT 1 (TYPICAL)
(RD-420)	DENOTES ROOF DECK BEING LIMITED COMMON PROPERTY FOR THE EXCLUSIVE USE OF STRATA LOT 420 (TYPICAL)

LCP AREAS ARE DEFINED AS TO HEIGHT BY THE CENTRE OF THE FLOOR ABOVE OR ITS EXTENSION OR WHERE THERE IS NO FLOOR ABOVE, BY THE AVERAGE HEIGHT OF A STRATA LOT WITHIN THE SAME BUILDING, UNLESS OTHERWISE NOTED

SECTION ARROWS POINT IN THE DIRECTION OF VIEW

www.BCStrataPlans.com

BUTLER SUNDVICK

JESSE MORIN, BCLS
Date: SEPTEMBER 16, 2022
File: 4772\Strata\Final
Dwg: 4772-FS

STRATA PLAN EPS8443

TOWER 2
LEVEL 39

0 5 10

SCALE 1 : 100 DISTANCES ARE IN METRES

THE INTENDED PLOT SCALE OF THIS PLAN IS 560 mm IN WIDTH BY 432 mm IN HEIGHT (C SIZE) WHEN PLOTTED AT A SCALE OF 1:100.

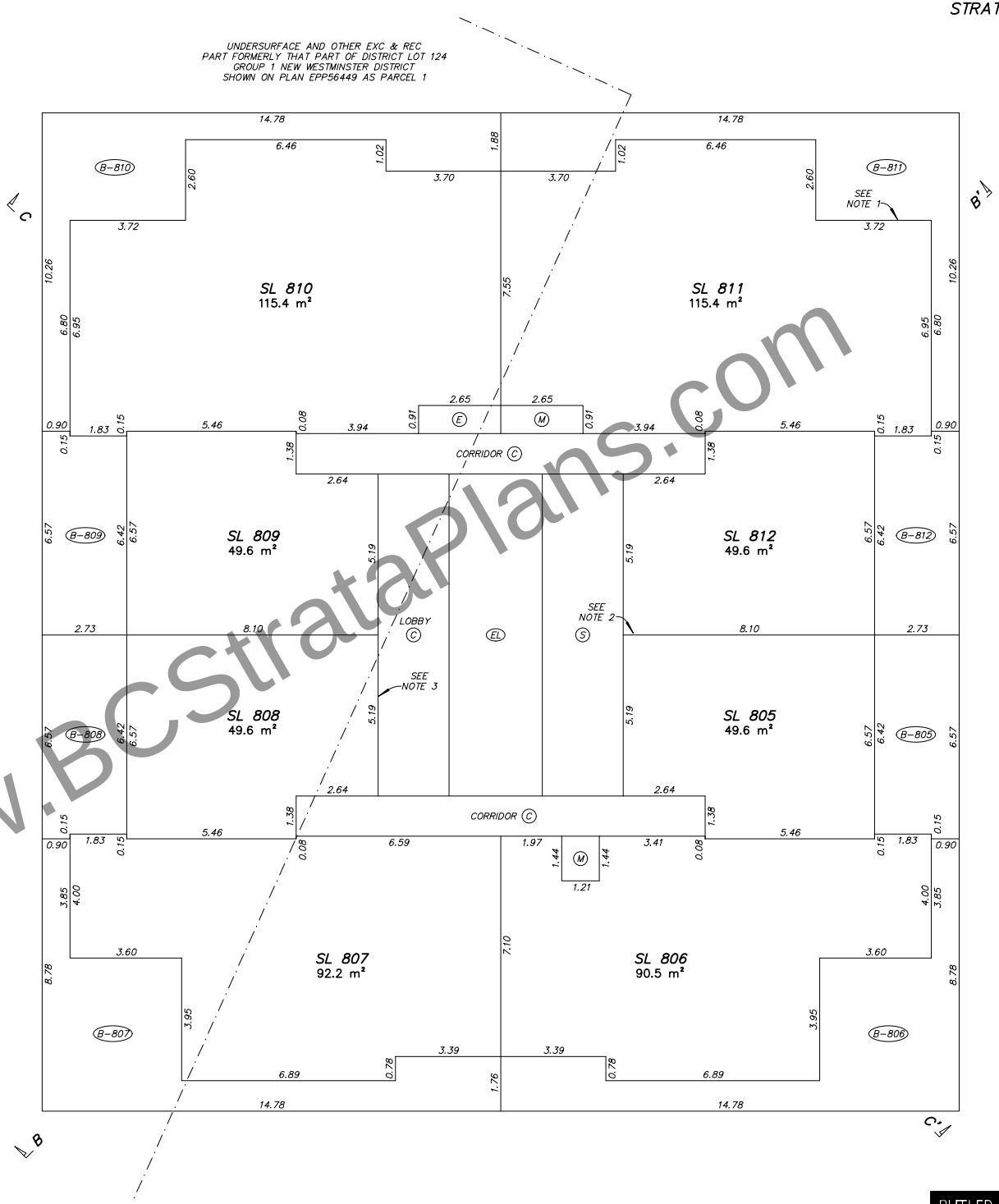

NOTES:

1. STRATA LOT BOUNDARY EXTERIOR FACE OF EXTERIOR WALLS (TYPICAL)
2. STRATA LOT BOUNDARY CENTRELINE OF DEMISING WALLS BETWEEN STRATA LOTS (TYPICAL)
3. STRATA LOT BOUNDARY EXTERIOR FACE OF WALLS ADJACENT TO COMMON AREAS (TYPICAL)
4. STRATA LOT BOUNDARY CENTRELINE FLOOR/CEILING (TYPICAL)
5. UPPER LIMIT OF LCP IS EXTENSION OF THE CENTRELINE OF THE FLOOR/CEILING ABOVE OR WHERE THERE IS NO FLOOR ABOVE, BY THE AVERAGE HEIGHT OF A STRATA LOT WITHIN THE SAME BUILDING (TYPICAL)

LEGEND

m²	DENOTES SQUARE METRES
SL	DENOTES STRATA LOT
PT	DENOTES PART
T	DENOTES TOTAL
Ex.	DENOTES EXPLANATORY
(C)	DENOTES COMMON PROPERTY
(E)	DENOTES ELECTRICAL ROOM BEING COMMON PROPERTY
(M)	DENOTES MECHANICAL ROOM BEING COMMON PROPERTY
(V)	DENOTES VESTIBULE BEING COMMON PROPERTY
(D)	DENOTES DUCT BEING COMMON PROPERTY
(S)	DENOTES STAIRS BEING COMMON PROPERTY
(EL)	DENOTES ELEVATOR BEING COMMON PROPERTY
(B-1)	DENOTES BALCONY BEING LIMITED COMMON PROPERTY FOR THE EXCLUSIVE USE OF STRATA LOT 1 (TYPICAL)
(RD-420)	DENOTES ROOF DECK BEING LIMITED COMMON PROPERTY FOR THE EXCLUSIVE USE OF STRATA LOT 420 (TYPICAL)

LCP AREAS ARE DEFINED AS TO HEIGHT BY THE CENTRE OF THE FLOOR ABOVE OR ITS EXTENSION OR WHERE THERE IS NO FLOOR ABOVE, BY THE AVERAGE HEIGHT OF A STRATA LOT WITHIN THE SAME BUILDING, UNLESS OTHERWISE NOTED

SECTION ARROWS POINT IN THE DIRECTION OF VIEW

www.BCStrataPlans.com

BUTLER SUNDVICK

JESSE MORIN, BCLS
Date: SEPTEMBER 16, 2022
File: 4772\Strata\Final
Dwg: 4772-FS

STRATA PLAN EPS8443

TOWER 2
LEVEL 40

0 5 10

SCALE 1 : 100 DISTANCES ARE IN METRES

THE INTENDED PLOT SCALE OF THIS PLAN IS 560 mm IN WIDTH BY 432 mm IN HEIGHT (C SIZE) WHEN PLOTTED AT A SCALE OF 1:100.

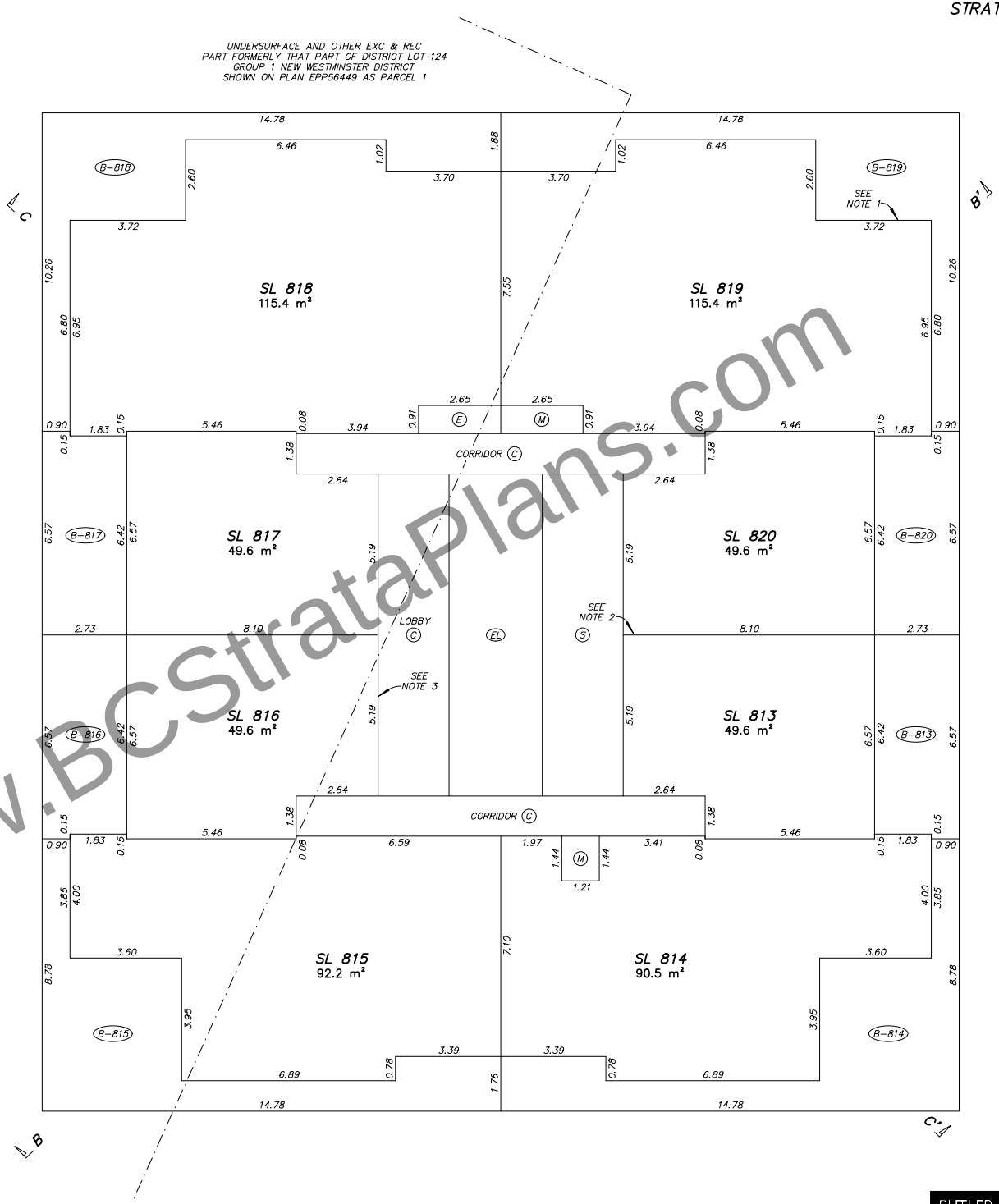

NOTES:

1. STRATA LOT BOUNDARY EXTERIOR FACE OF EXTERIOR WALLS (TYPICAL)
2. STRATA LOT BOUNDARY CENTRELINE OF DEMISING WALLS BETWEEN STRATA LOTS (TYPICAL)
3. STRATA LOT BOUNDARY EXTERIOR FACE OF WALLS ADJACENT TO COMMON AREAS (TYPICAL)
4. STRATA LOT BOUNDARY CENTRELINE FLOOR/CEILING (TYPICAL)
5. UPPER LIMIT OF LCP IS EXTENSION OF THE CENTRELINE OF THE FLOOR/CEILING ABOVE OR WHERE THERE IS NO FLOOR ABOVE, BY THE AVERAGE HEIGHT OF A STRATA LOT WITHIN THE SAME BUILDING (TYPICAL)

LEGEND

m²	DENOTES SQUARE METRES
SL	DENOTES STRATA LOT
PT	DENOTES PART
T	DENOTES TOTAL
Ex.	DENOTES EXPLANATORY
(C)	DENOTES COMMON PROPERTY
(E)	DENOTES ELECTRICAL ROOM BEING COMMON PROPERTY
(M)	DENOTES MECHANICAL ROOM BEING COMMON PROPERTY
(V)	DENOTES VESTIBULE BEING COMMON PROPERTY
(D)	DENOTES DUCT BEING COMMON PROPERTY
(S)	DENOTES STAIRS BEING COMMON PROPERTY
(EL)	DENOTES ELEVATOR BEING COMMON PROPERTY
(B-1)	DENOTES BALCONY BEING LIMITED COMMON PROPERTY FOR THE EXCLUSIVE USE OF STRATA LOT 1 (TYPICAL)
(RD-420)	DENOTES ROOF DECK BEING LIMITED COMMON PROPERTY FOR THE EXCLUSIVE USE OF STRATA LOT 420 (TYPICAL)

LCP AREAS ARE DEFINED AS TO HEIGHT BY THE CENTRE OF THE FLOOR ABOVE OR ITS EXTENSION OR WHERE THERE IS NO FLOOR ABOVE, BY THE AVERAGE HEIGHT OF A STRATA LOT WITHIN THE SAME BUILDING, UNLESS OTHERWISE NOTED

SECTION ARROWS POINT IN THE DIRECTION OF VIEW

www.BCStrataPlans.com

BUTLER SUNDVICK

JESSE MORIN, BCLS
Date: SEPTEMBER 16, 2022
File: 4772\Strata\Final
Dwg: 4772-FS

STRATA PLAN EPS8443

TOWER 2
LEVEL 41

0 5 10

SCALE 1 : 100 DISTANCES ARE IN METRES

THE INTENDED PLOT SCALE OF THIS PLAN IS 560 mm IN WIDTH BY 432 mm IN HEIGHT (C SIZE) WHEN PLOTTED AT A SCALE OF 1:100.

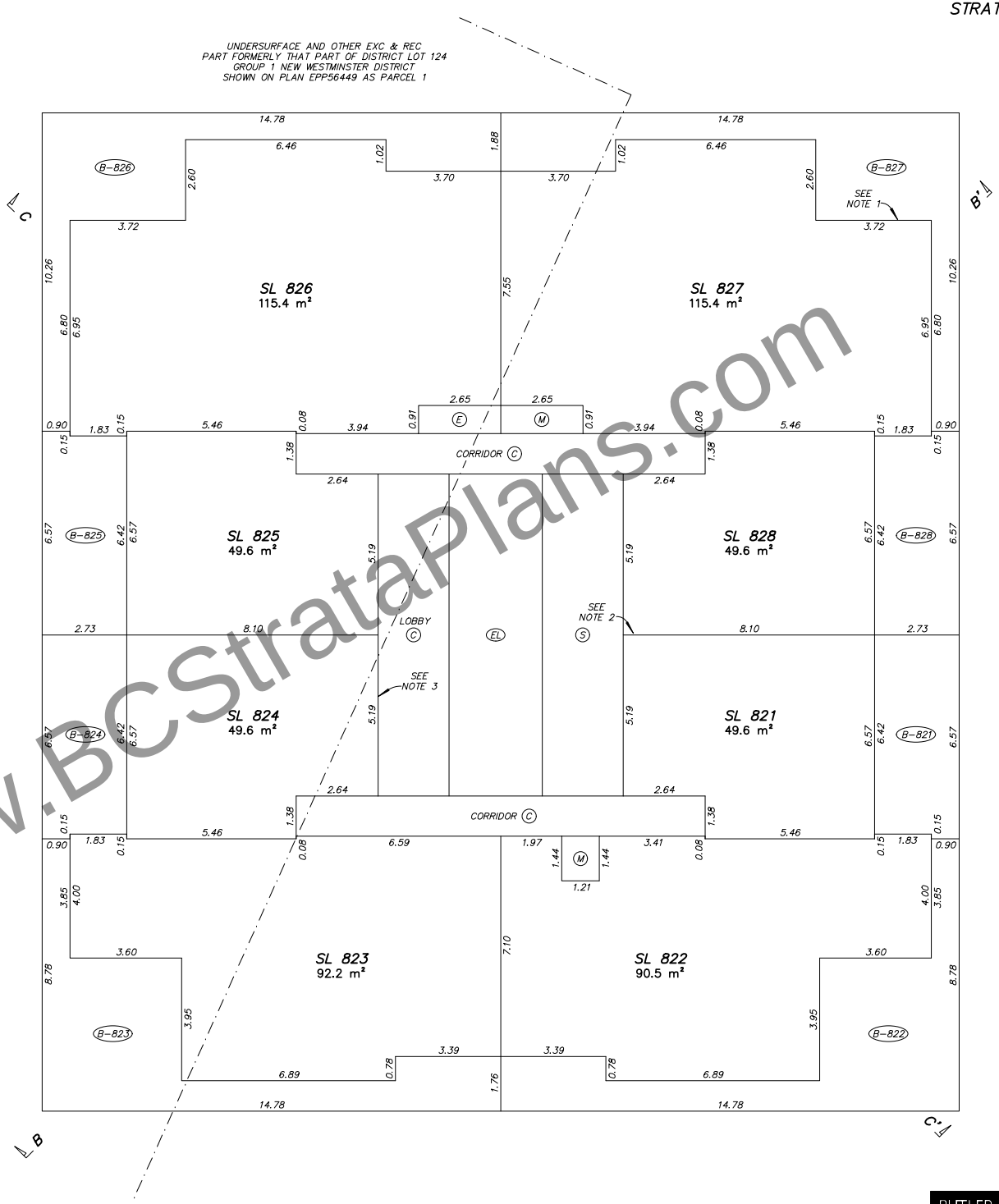

NOTES:

1. STRATA LOT BOUNDARY EXTERIOR FACE OF EXTERIOR WALLS (TYPICAL)
2. STRATA LOT BOUNDARY CENTRELINE OF DEMISING WALLS BETWEEN STRATA LOTS (TYPICAL)
3. STRATA LOT BOUNDARY EXTERIOR FACE OF WALLS ADJACENT TO COMMON AREAS (TYPICAL)
4. STRATA LOT BOUNDARY CENTRELINE FLOOR/CEILING (TYPICAL)
5. UPPER LIMIT OF LCP IS EXTENSION OF THE CENTRELINE OF THE FLOOR/CEILING ABOVE OR WHERE THERE IS NO FLOOR ABOVE, BY THE AVERAGE HEIGHT OF A STRATA LOT WITHIN THE SAME BUILDING (TYPICAL)

LEGEND

m²	DENOTES SQUARE METRES
SL	DENOTES STRATA LOT
PT	DENOTES PART
T	DENOTES TOTAL
Ex.	DENOTES EXPLANATORY
(C)	DENOTES COMMON PROPERTY
(E)	DENOTES ELECTRICAL ROOM BEING COMMON PROPERTY
(M)	DENOTES MECHANICAL ROOM BEING COMMON PROPERTY
(V)	DENOTES VESTIBULE BEING COMMON PROPERTY
(D)	DENOTES DUCT BEING COMMON PROPERTY
(S)	DENOTES STAIRS BEING COMMON PROPERTY
(EL)	DENOTES ELEVATOR BEING COMMON PROPERTY
(B-1)	DENOTES BALCONY BEING LIMITED COMMON PROPERTY FOR THE EXCLUSIVE USE OF STRATA LOT 1 (TYPICAL)
(RD-420)	DENOTES ROOF DECK BEING LIMITED COMMON PROPERTY FOR THE EXCLUSIVE USE OF STRATA LOT 420 (TYPICAL)

LCP AREAS ARE DEFINED AS TO HEIGHT BY THE CENTRE OF THE FLOOR ABOVE OR ITS EXTENSION OR WHERE THERE IS NO FLOOR ABOVE, BY THE AVERAGE HEIGHT OF A STRATA LOT WITHIN THE SAME BUILDING, UNLESS OTHERWISE NOTED

SECTION ARROWS POINT IN THE DIRECTION OF VIEW

www.BCStrataPlans.com

BUTLER SUNDVICK

JESSE MORIN, BCLS
Date: SEPTEMBER 16, 2022
File: 4772\Strata\Final
Dwg: 4772-FS

STRATA PLAN EPS8443

TOWER 2
LEVEL 42

0 5 10

SCALE 1 : 100 DISTANCES ARE IN METRES

THE INTENDED PLOT SCALE OF THIS PLAN IS 560 mm IN WIDTH BY 432 mm IN HEIGHT (C SIZE) WHEN PLOTTED AT A SCALE OF 1:100.

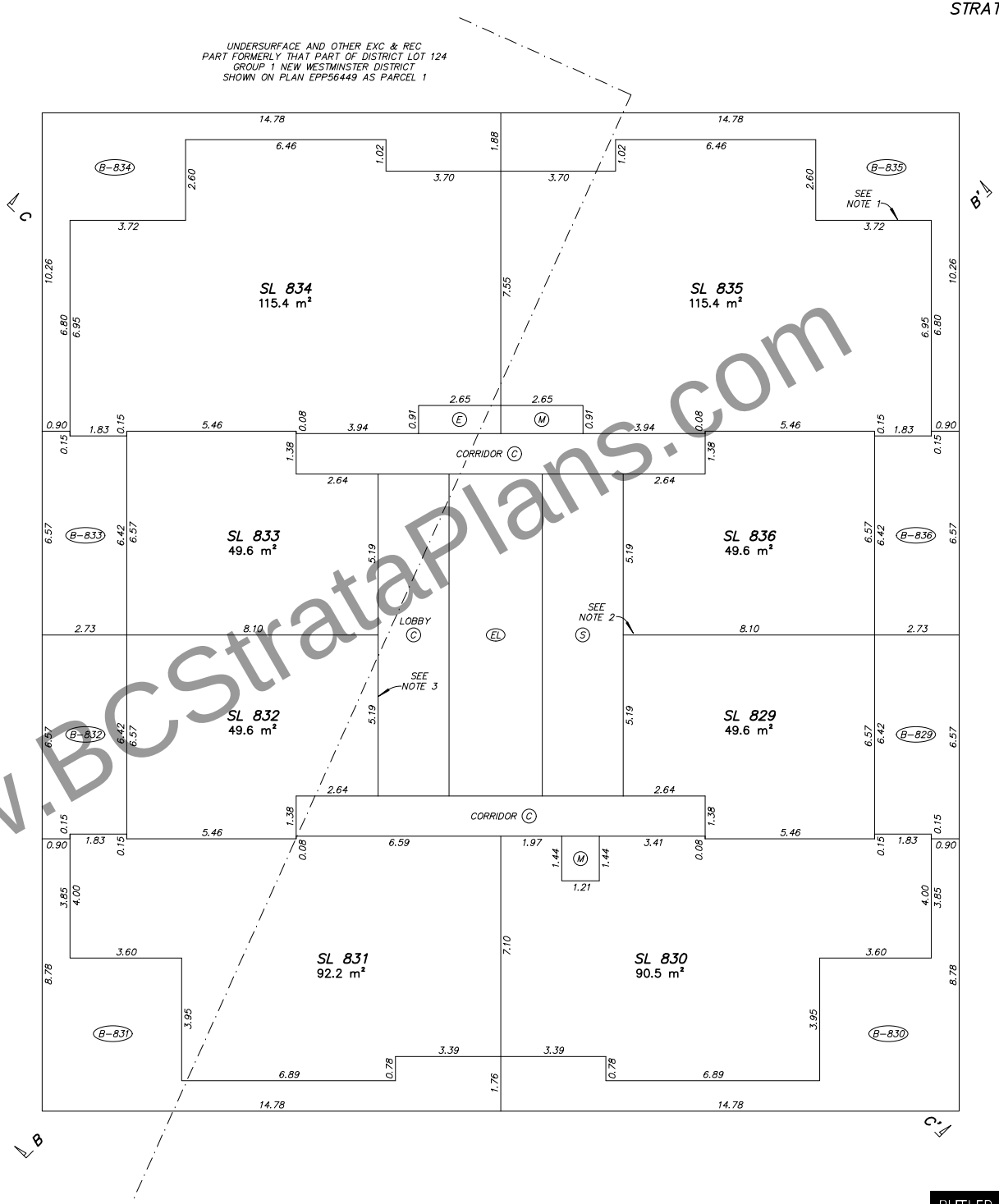

NOTES:

1. STRATA LOT BOUNDARY EXTERIOR FACE OF EXTERIOR WALLS (TYPICAL)
2. STRATA LOT BOUNDARY CENTRELINE OF DEMISING WALLS BETWEEN STRATA LOTS (TYPICAL)
3. STRATA LOT BOUNDARY EXTERIOR FACE OF WALLS ADJACENT TO COMMON AREAS (TYPICAL)
4. STRATA LOT BOUNDARY CENTRELINE FLOOR/CEILING (TYPICAL)
5. UPPER LIMIT OF LCP IS EXTENSION OF THE CENTRELINE OF THE FLOOR/CEILING ABOVE OR WHERE THERE IS NO FLOOR ABOVE, BY THE AVERAGE HEIGHT OF A STRATA LOT WITHIN THE SAME BUILDING (TYPICAL)

LEGEND

m²	DENOTES SQUARE METRES
SL	DENOTES STRATA LOT
PT	DENOTES PART
T	DENOTES TOTAL
Ex.	DENOTES EXPLANATORY
(C)	DENOTES COMMON PROPERTY
(E)	DENOTES ELECTRICAL ROOM BEING COMMON PROPERTY
(M)	DENOTES MECHANICAL ROOM BEING COMMON PROPERTY
(V)	DENOTES VESTIBULE BEING COMMON PROPERTY
(D)	DENOTES DUCT BEING COMMON PROPERTY
(S)	DENOTES STAIRS BEING COMMON PROPERTY
(EL)	DENOTES ELEVATOR BEING COMMON PROPERTY
(B-1)	DENOTES BALCONY BEING LIMITED COMMON PROPERTY FOR THE EXCLUSIVE USE OF STRATA LOT 1 (TYPICAL)
(RD-420)	DENOTES ROOF DECK BEING LIMITED COMMON PROPERTY FOR THE EXCLUSIVE USE OF STRATA LOT 420 (TYPICAL)

LCP AREAS ARE DEFINED AS TO HEIGHT BY THE CENTRE OF THE FLOOR ABOVE OR ITS EXTENSION OR WHERE THERE IS NO FLOOR ABOVE, BY THE AVERAGE HEIGHT OF A STRATA LOT WITHIN THE SAME BUILDING, UNLESS OTHERWISE NOTED

SECTION ARROWS POINT IN THE DIRECTION OF VIEW

www.BCStrataPlans.com

BUTLER SUNDVICK

JESSE MORIN, BCLS
Date: SEPTEMBER 16, 2022
File: 4772\Strata\Final
Dwg: 4772-FS

STRATA PLAN EPS8443

TOWER 2
LEVEL 43

0 5 10

SCALE 1 : 100 DISTANCES ARE IN METRES

THE INTENDED PLOT SCALE OF THIS PLAN IS 560 mm IN WIDTH BY 432 mm IN HEIGHT (C SIZE) WHEN PLOTTED AT A SCALE OF 1:100.

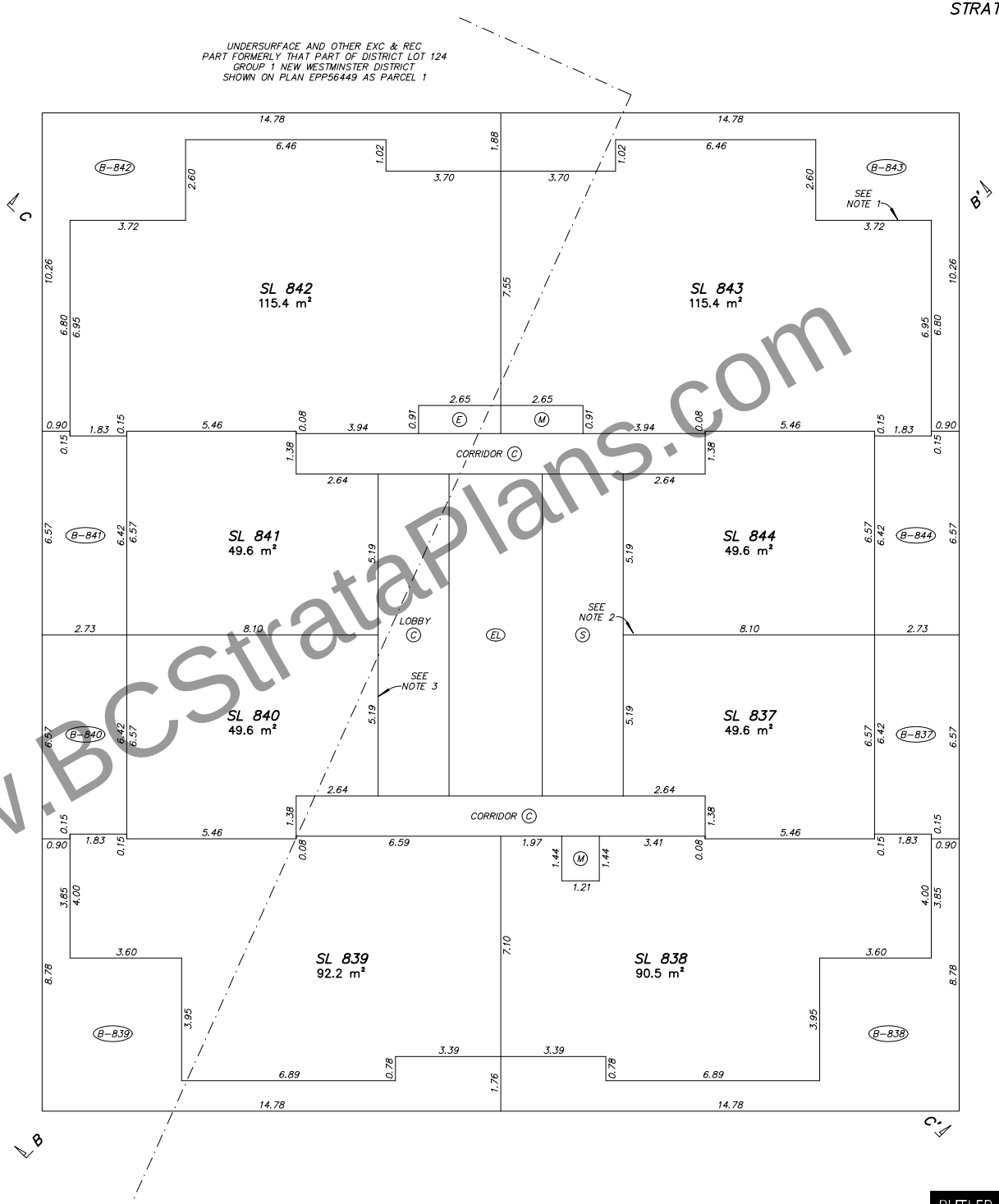

NOTES:

1. STRATA LOT BOUNDARY EXTERIOR FACE OF EXTERIOR WALLS (TYPICAL)
2. STRATA LOT BOUNDARY CENTRELINE OF DEMISING WALLS BETWEEN STRATA LOTS (TYPICAL)
3. STRATA LOT BOUNDARY EXTERIOR FACE OF WALLS ADJACENT TO COMMON AREAS (TYPICAL)
4. STRATA LOT BOUNDARY CENTRELINE FLOOR/CEILING (TYPICAL)
5. UPPER LIMIT OF LCP IS EXTENSION OF THE CENTRELINE OF THE FLOOR/CEILING ABOVE OR WHERE THERE IS NO FLOOR ABOVE, BY THE AVERAGE HEIGHT OF A STRATA LOT WITHIN THE SAME BUILDING (TYPICAL)

LEGEND

m²	DENOTES SQUARE METRES
SL	DENOTES STRATA LOT
PT	DENOTES PART
T	DENOTES TOTAL
Ex.	DENOTES EXPLANATORY
(C)	DENOTES COMMON PROPERTY
(E)	DENOTES ELECTRICAL ROOM BEING COMMON PROPERTY
(M)	DENOTES MECHANICAL ROOM BEING COMMON PROPERTY
(V)	DENOTES VESTIBULE BEING COMMON PROPERTY
(D)	DENOTES DUCT BEING COMMON PROPERTY
(S)	DENOTES STAIRS BEING COMMON PROPERTY
(EL)	DENOTES ELEVATOR BEING COMMON PROPERTY
(B-1)	DENOTES BALCONY BEING LIMITED COMMON PROPERTY FOR THE EXCLUSIVE USE OF STRATA LOT 1 (TYPICAL)
(RD-420)	DENOTES ROOF DECK BEING LIMITED COMMON PROPERTY FOR THE EXCLUSIVE USE OF STRATA LOT 420 (TYPICAL)

LCP AREAS ARE DEFINED AS TO HEIGHT BY THE CENTRE OF THE FLOOR ABOVE OR ITS EXTENSION OR WHERE THERE IS NO FLOOR ABOVE, BY THE AVERAGE HEIGHT OF A STRATA LOT WITHIN THE SAME BUILDING, UNLESS OTHERWISE NOTED

SECTION ARROWS POINT IN THE DIRECTION OF VIEW

www.BCStrataPlans.com

BUTLER SUNDVICK

JESSE MORIN, BCLS
Date: SEPTEMBER 16, 2022
File: 4772\Strata\Final
Dwg: 4772-FS

STRATA PLAN EPS8443

TOWER 2
LEVEL 44

0 5 10

SCALE 1 : 100 DISTANCES ARE IN METRES

THE INTENDED PLOT SCALE OF THIS PLAN IS 560 mm IN WIDTH BY 432 mm IN HEIGHT (C SIZE) WHEN PLOTTED AT A SCALE OF 1:100.

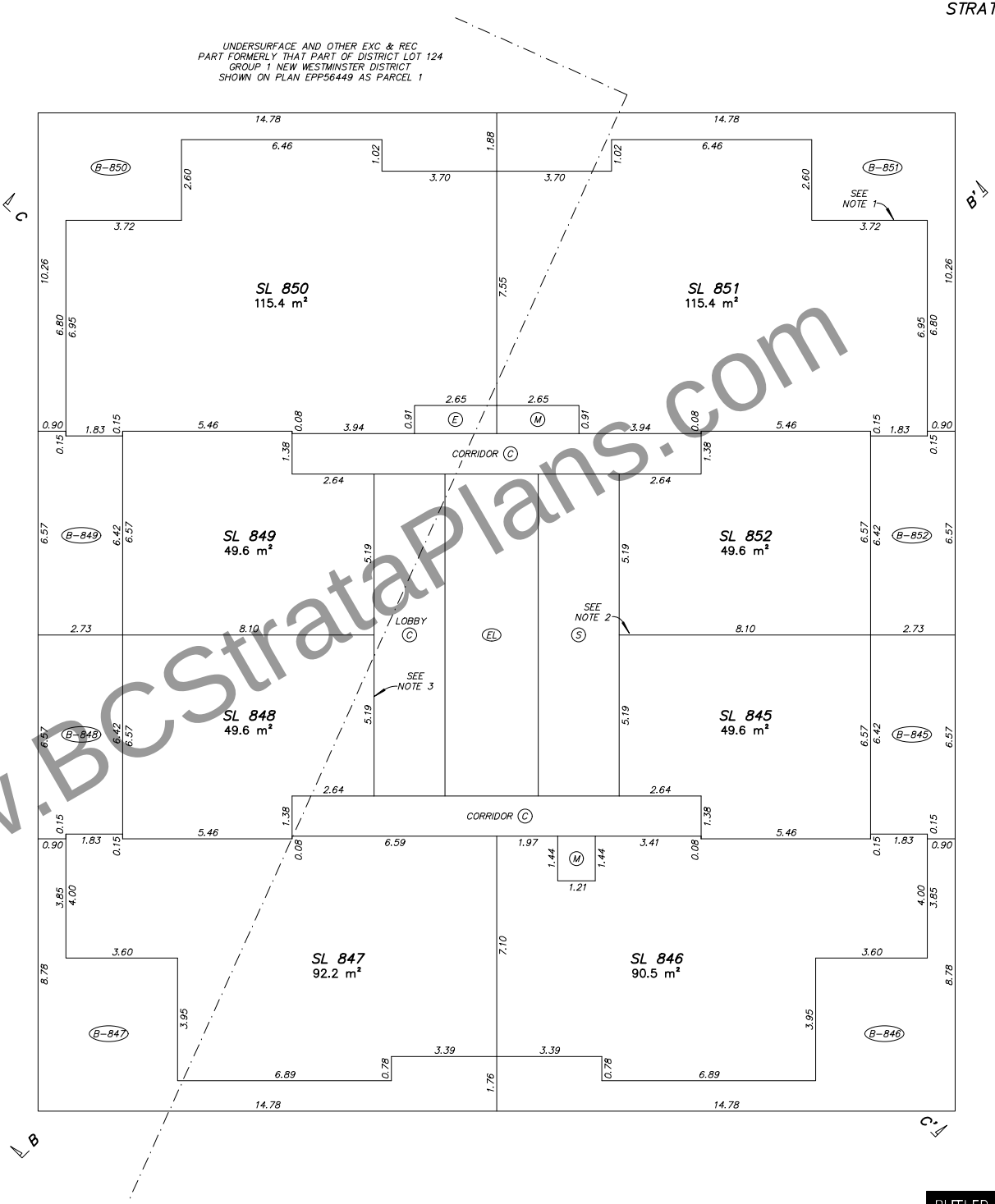

NOTES:

1. STRATA LOT BOUNDARY EXTERIOR FACE OF EXTERIOR WALLS (TYPICAL)
2. STRATA LOT BOUNDARY CENTRELINE OF DEMISING WALLS BETWEEN STRATA LOTS (TYPICAL)
3. STRATA LOT BOUNDARY EXTERIOR FACE OF WALLS ADJACENT TO COMMON AREAS (TYPICAL)
4. STRATA LOT BOUNDARY CENTRELINE FLOOR/CEILING (TYPICAL)
5. UPPER LIMIT OF LCP IS EXTENSION OF THE CENTRELINE OF THE FLOOR/CEILING ABOVE OR WHERE THERE IS NO FLOOR ABOVE, BY THE AVERAGE HEIGHT OF A STRATA LOT WITHIN THE SAME BUILDING (TYPICAL)

LEGEND

m²	DENOTES SQUARE METRES
SL	DENOTES STRATA LOT
PT	DENOTES PART
T	DENOTES TOTAL
Ex.	DENOTES EXPLANATORY
(C)	DENOTES COMMON PROPERTY
(E)	DENOTES ELECTRICAL ROOM BEING COMMON PROPERTY
(M)	DENOTES MECHANICAL ROOM BEING COMMON PROPERTY
(V)	DENOTES VESTIBULE BEING COMMON PROPERTY
(D)	DENOTES DUCT BEING COMMON PROPERTY
(S)	DENOTES STAIRS BEING COMMON PROPERTY
(EL)	DENOTES ELEVATOR BEING COMMON PROPERTY
(B-1)	DENOTES BALCONY BEING LIMITED COMMON PROPERTY FOR THE EXCLUSIVE USE OF STRATA LOT 1 (TYPICAL)
(RD-420)	DENOTES ROOF DECK BEING LIMITED COMMON PROPERTY FOR THE EXCLUSIVE USE OF STRATA LOT 420 (TYPICAL)

LCP AREAS ARE DEFINED AS TO HEIGHT BY THE CENTRE OF THE FLOOR ABOVE OR ITS EXTENSION OR WHERE THERE IS NO FLOOR ABOVE, BY THE AVERAGE HEIGHT OF A STRATA LOT WITHIN THE SAME BUILDING, UNLESS OTHERWISE NOTED

SECTION ARROWS POINT IN THE DIRECTION OF VIEW

www.BCStrataPlans.com

BUTLER SUNDVICK

JESSE MORIN, BCLS
Date: SEPTEMBER 16, 2022
File: 4772\Strata\Final
Dwg: 4772-FS

STRATA PLAN EPS8443

TOWER 2
LEVEL 45

0 5 10

SCALE 1 : 100 DISTANCES ARE IN METRES

THE INTENDED PLOT SCALE OF THIS PLAN IS 560 mm IN WIDTH BY 432 mm IN HEIGHT (C SIZE) WHEN PLOTTED AT A SCALE OF 1:100.

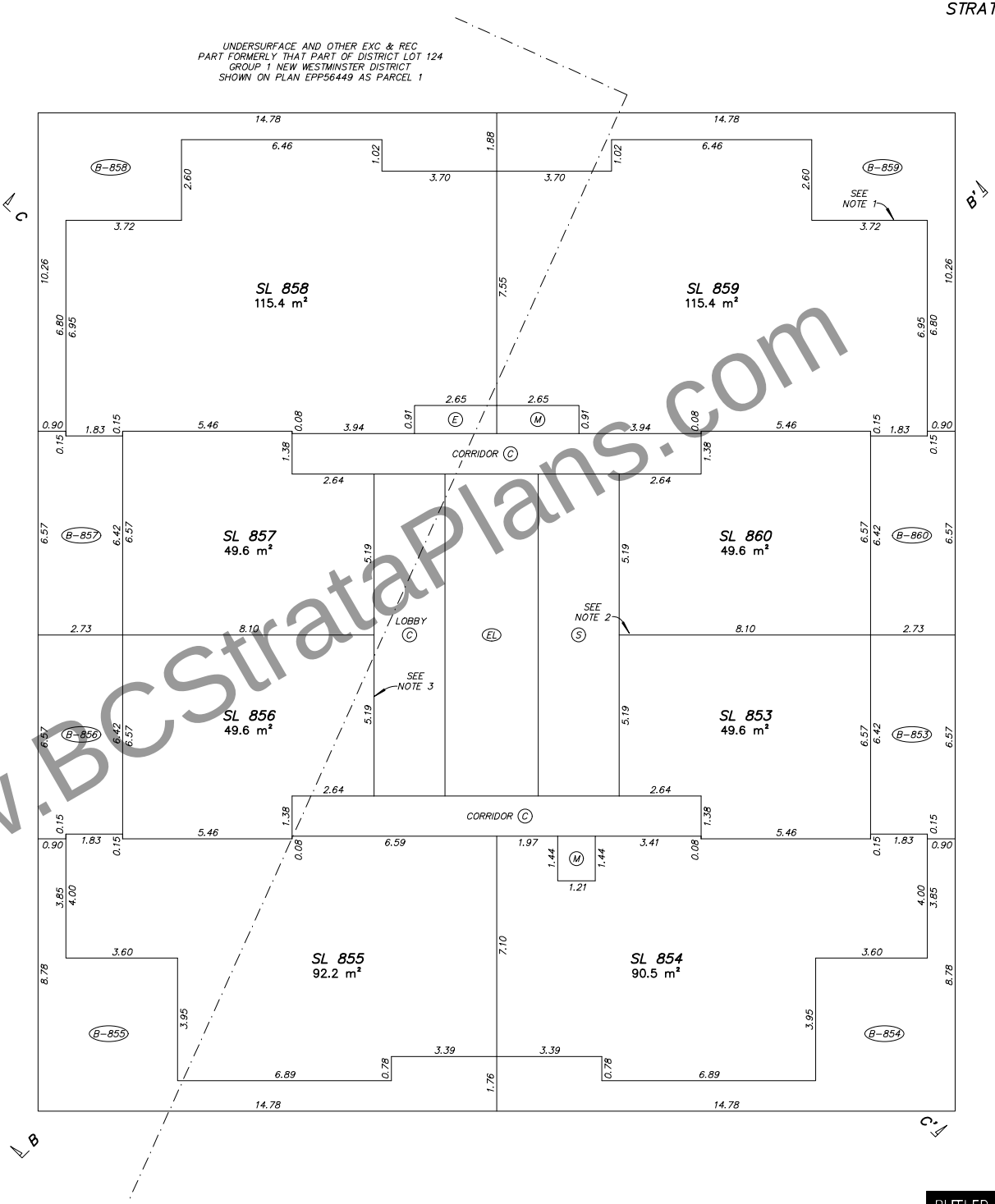

NOTES:

1. STRATA LOT BOUNDARY EXTERIOR FACE OF EXTERIOR WALLS (TYPICAL)
2. STRATA LOT BOUNDARY CENTRELINE OF DEMISING WALLS BETWEEN STRATA LOTS (TYPICAL)
3. STRATA LOT BOUNDARY EXTERIOR FACE OF WALLS ADJACENT TO COMMON AREAS (TYPICAL)
4. STRATA LOT BOUNDARY CENTRELINE FLOOR/CEILING (TYPICAL)
5. UPPER LIMIT OF LCP IS EXTENSION OF THE CENTRELINE OF THE FLOOR/CEILING ABOVE OR WHERE THERE IS NO FLOOR ABOVE, BY THE AVERAGE HEIGHT OF A STRATA LOT WITHIN THE SAME BUILDING (TYPICAL)

LEGEND

m²	DENOTES SQUARE METRES
SL	DENOTES STRATA LOT
PT	DENOTES PART
T	DENOTES TOTAL
Ex.	DENOTES EXPLANATORY
(C)	DENOTES COMMON PROPERTY
(E)	DENOTES ELECTRICAL ROOM BEING COMMON PROPERTY
(M)	DENOTES MECHANICAL ROOM BEING COMMON PROPERTY
(V)	DENOTES VESTIBULE BEING COMMON PROPERTY
(D)	DENOTES DUCT BEING COMMON PROPERTY
(S)	DENOTES STAIRS BEING COMMON PROPERTY
(EL)	DENOTES ELEVATOR BEING COMMON PROPERTY
(B-1)	DENOTES BALCONY BEING LIMITED COMMON PROPERTY FOR THE EXCLUSIVE USE OF STRATA LOT 1 (TYPICAL)
(RD-420)	DENOTES ROOF DECK BEING LIMITED COMMON PROPERTY FOR THE EXCLUSIVE USE OF STRATA LOT 420 (TYPICAL)

LCP AREAS ARE DEFINED AS TO HEIGHT BY THE CENTRE OF THE FLOOR ABOVE OR ITS EXTENSION OR WHERE THERE IS NO FLOOR ABOVE, BY THE AVERAGE HEIGHT OF A STRATA LOT WITHIN THE SAME BUILDING, UNLESS OTHERWISE NOTED

SECTION ARROWS POINT IN THE DIRECTION OF VIEW

www.BCStrataPlans.com

BUTLER SUNDVICK

JESSE MORIN, BCLS
Date: SEPTEMBER 16, 2022
File: 4772\Strata\Final
Dwg: 4772-FS

STRATA PLAN EPS8443

TOWER 2
LEVEL 46

0 5 10

SCALE 1 : 100 DISTANCES ARE IN METRES

THE INTENDED PLOT SCALE OF THIS PLAN IS 560 mm IN WIDTH BY 432 mm IN HEIGHT (C SIZE) WHEN PLOTTED AT A SCALE OF 1:100.

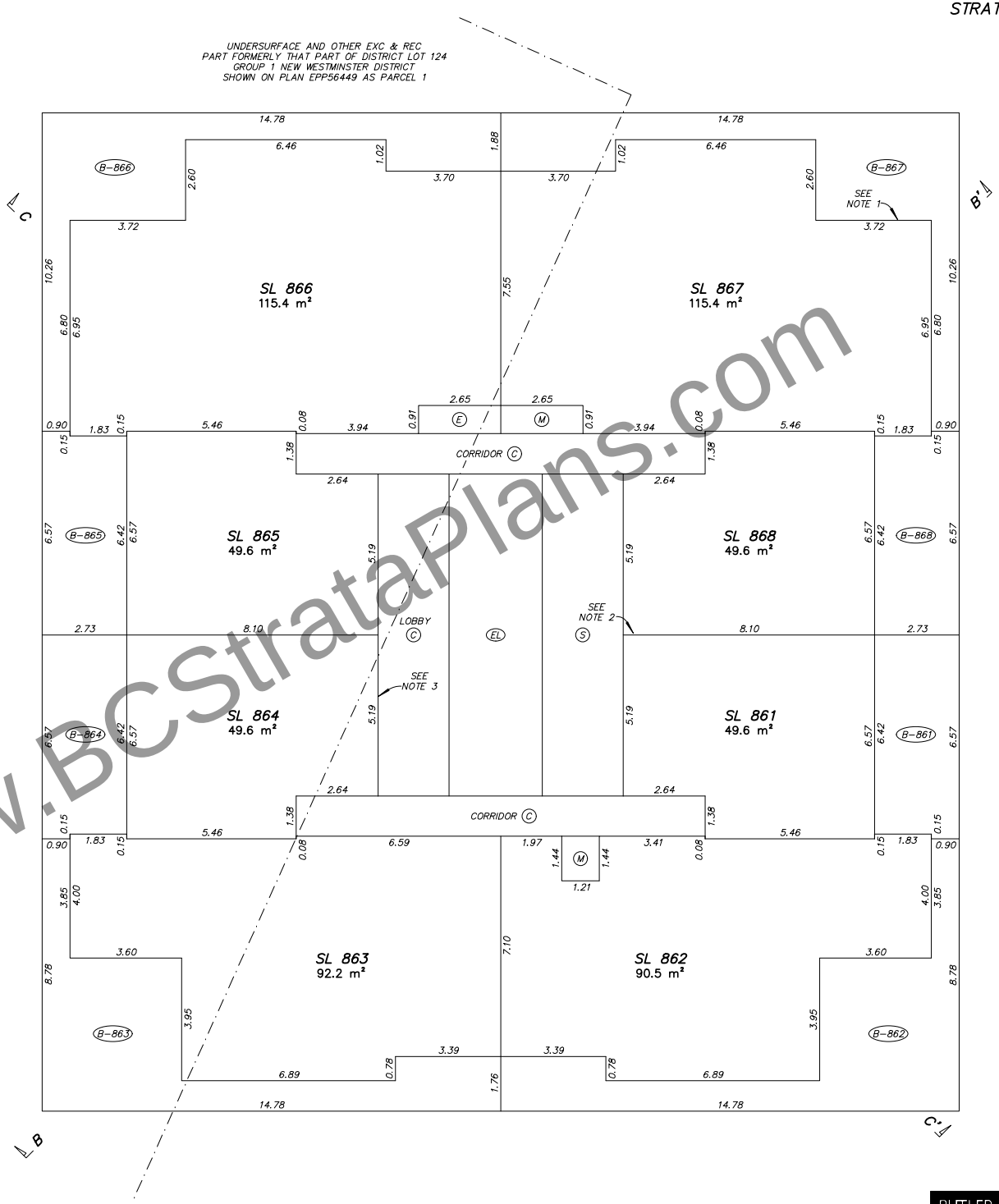

NOTES:

1. STRATA LOT BOUNDARY EXTERIOR FACE OF EXTERIOR WALLS (TYPICAL)
2. STRATA LOT BOUNDARY CENTRELINE OF DEMISING WALLS BETWEEN STRATA LOTS (TYPICAL)
3. STRATA LOT BOUNDARY EXTERIOR FACE OF WALLS ADJACENT TO COMMON AREAS (TYPICAL)
4. STRATA LOT BOUNDARY CENTRELINE FLOOR/CEILING (TYPICAL)
5. UPPER LIMIT OF LCP IS EXTENSION OF THE CENTRELINE OF THE FLOOR/CEILING ABOVE OR WHERE THERE IS NO FLOOR ABOVE, BY THE AVERAGE HEIGHT OF A STRATA LOT WITHIN THE SAME BUILDING (TYPICAL)

LEGEND

m²	DENOTES SQUARE METRES
SL	DENOTES STRATA LOT
PT	DENOTES PART
T	DENOTES TOTAL
Ex.	DENOTES EXPLANATORY
(C)	DENOTES COMMON PROPERTY
(E)	DENOTES ELECTRICAL ROOM BEING COMMON PROPERTY
(M)	DENOTES MECHANICAL ROOM BEING COMMON PROPERTY
(V)	DENOTES VESTIBULE BEING COMMON PROPERTY
(D)	DENOTES DUCT BEING COMMON PROPERTY
(S)	DENOTES STAIRS BEING COMMON PROPERTY
(EL)	DENOTES ELEVATOR BEING COMMON PROPERTY
(B-1)	DENOTES BALCONY BEING LIMITED COMMON PROPERTY FOR THE EXCLUSIVE USE OF STRATA LOT 1 (TYPICAL)
(RD-420)	DENOTES ROOF DECK BEING LIMITED COMMON PROPERTY FOR THE EXCLUSIVE USE OF STRATA LOT 420 (TYPICAL)

LCP AREAS ARE DEFINED AS TO HEIGHT BY THE CENTRE OF THE FLOOR ABOVE OR ITS EXTENSION OR WHERE THERE IS NO FLOOR ABOVE, BY THE AVERAGE HEIGHT OF A STRATA LOT WITHIN THE SAME BUILDING, UNLESS OTHERWISE NOTED

SECTION ARROWS POINT IN THE DIRECTION OF VIEW

www.BCStrataPlans.com

BUTLER SUNDVICK

JESSE MORIN, BCLS
Date: SEPTEMBER 16, 2022
File: 4772\Strata\Final
Dwg: 4772-FS

STRATA PLAN EPS8443

TOWER 2
LEVEL 47

0 5 10

SCALE 1 : 100 DISTANCES ARE IN METRES

THE INTENDED PLOT SCALE OF THIS PLAN IS 560 mm IN WIDTH BY 432 mm IN HEIGHT (C SIZE) WHEN PLOTTED AT A SCALE OF 1:100.

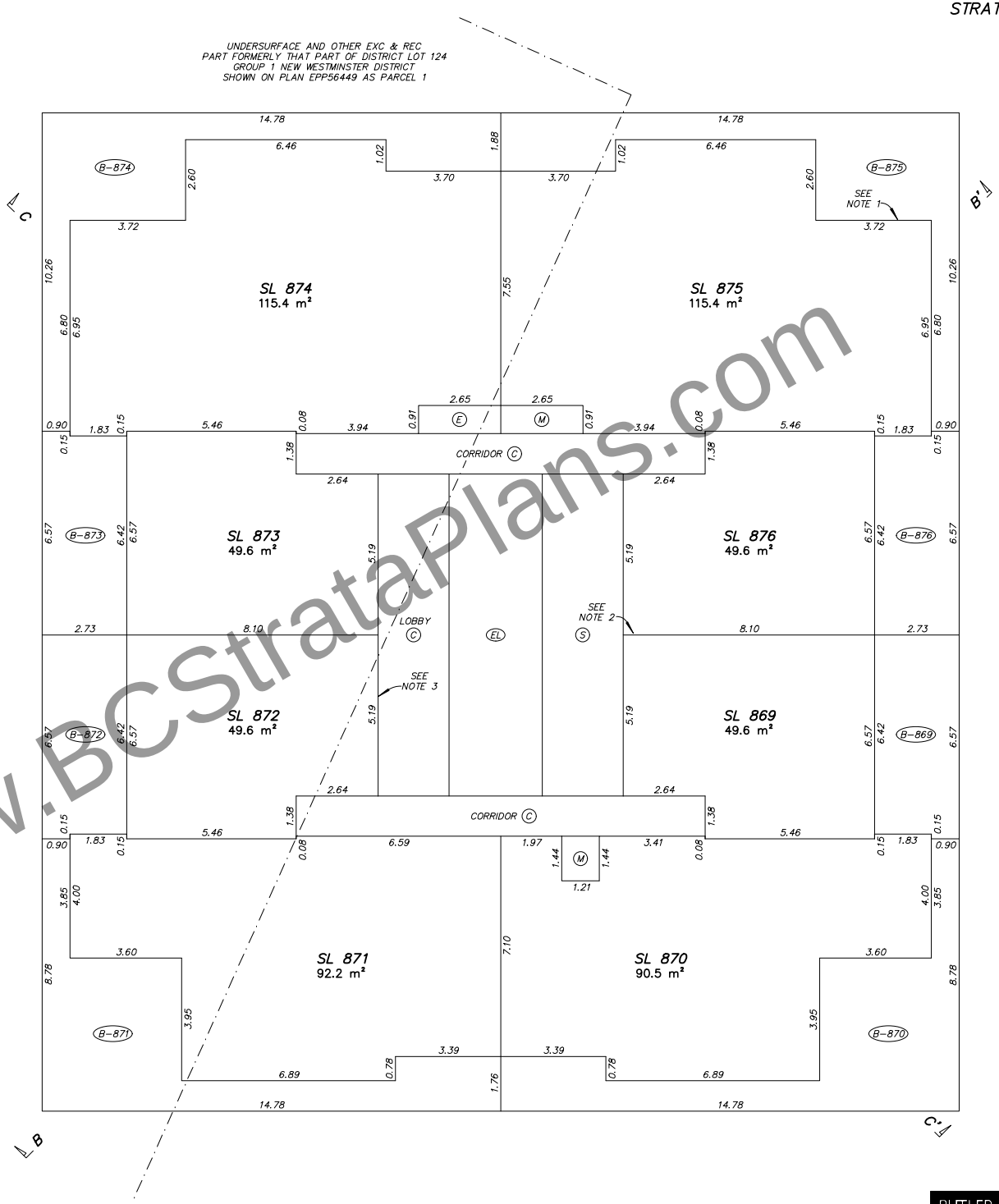

NOTES:

1. STRATA LOT BOUNDARY EXTERIOR FACE OF EXTERIOR WALLS (TYPICAL)
2. STRATA LOT BOUNDARY CENTRELINE OF DEMISING WALLS BETWEEN STRATA LOTS (TYPICAL)
3. STRATA LOT BOUNDARY EXTERIOR FACE OF WALLS ADJACENT TO COMMON AREAS (TYPICAL)
4. STRATA LOT BOUNDARY CENTRELINE FLOOR/CEILING (TYPICAL)
5. UPPER LIMIT OF LCP IS EXTENSION OF THE CENTRELINE OF THE FLOOR/CEILING ABOVE OR WHERE THERE IS NO FLOOR ABOVE, BY THE AVERAGE HEIGHT OF A STRATA LOT WITHIN THE SAME BUILDING (TYPICAL)

LEGEND

m²	DENOTES SQUARE METRES
SL	DENOTES STRATA LOT
PT	DENOTES PART
T	DENOTES TOTAL
Ex.	DENOTES EXPLANATORY
(C)	DENOTES COMMON PROPERTY
(E)	DENOTES ELECTRICAL ROOM BEING COMMON PROPERTY
(M)	DENOTES MECHANICAL ROOM BEING COMMON PROPERTY
(V)	DENOTES VESTIBULE BEING COMMON PROPERTY
(D)	DENOTES DUCT BEING COMMON PROPERTY
(S)	DENOTES STAIRS BEING COMMON PROPERTY
(EL)	DENOTES ELEVATOR BEING COMMON PROPERTY
(B-1)	DENOTES BALCONY BEING LIMITED COMMON PROPERTY FOR THE EXCLUSIVE USE OF STRATA LOT 1 (TYPICAL)
(RD-420)	DENOTES ROOF DECK BEING LIMITED COMMON PROPERTY FOR THE EXCLUSIVE USE OF STRATA LOT 420 (TYPICAL)

LCP AREAS ARE DEFINED AS TO HEIGHT BY THE CENTRE OF THE FLOOR ABOVE OR ITS EXTENSION OR WHERE THERE IS NO FLOOR ABOVE, BY THE AVERAGE HEIGHT OF A STRATA LOT WITHIN THE SAME BUILDING, UNLESS OTHERWISE NOTED

SECTION ARROWS POINT IN THE DIRECTION OF VIEW

www.BCStrataPlans.com

BUTLER SUNDVICK

JESSE MORIN, BCLS
Date: SEPTEMBER 16, 2022
File: 4772\Strata\Final
Dwg: 4772-FS

STRATA PLAN EPS8443

TOWER 2
LEVEL 48

0 5 10

SCALE 1 : 100 DISTANCES ARE IN METRES

THE INTENDED PLOT SCALE OF THIS PLAN IS 560 mm IN WIDTH BY 432 mm IN HEIGHT (C SIZE) WHEN PLOTTED AT A SCALE OF 1:100.

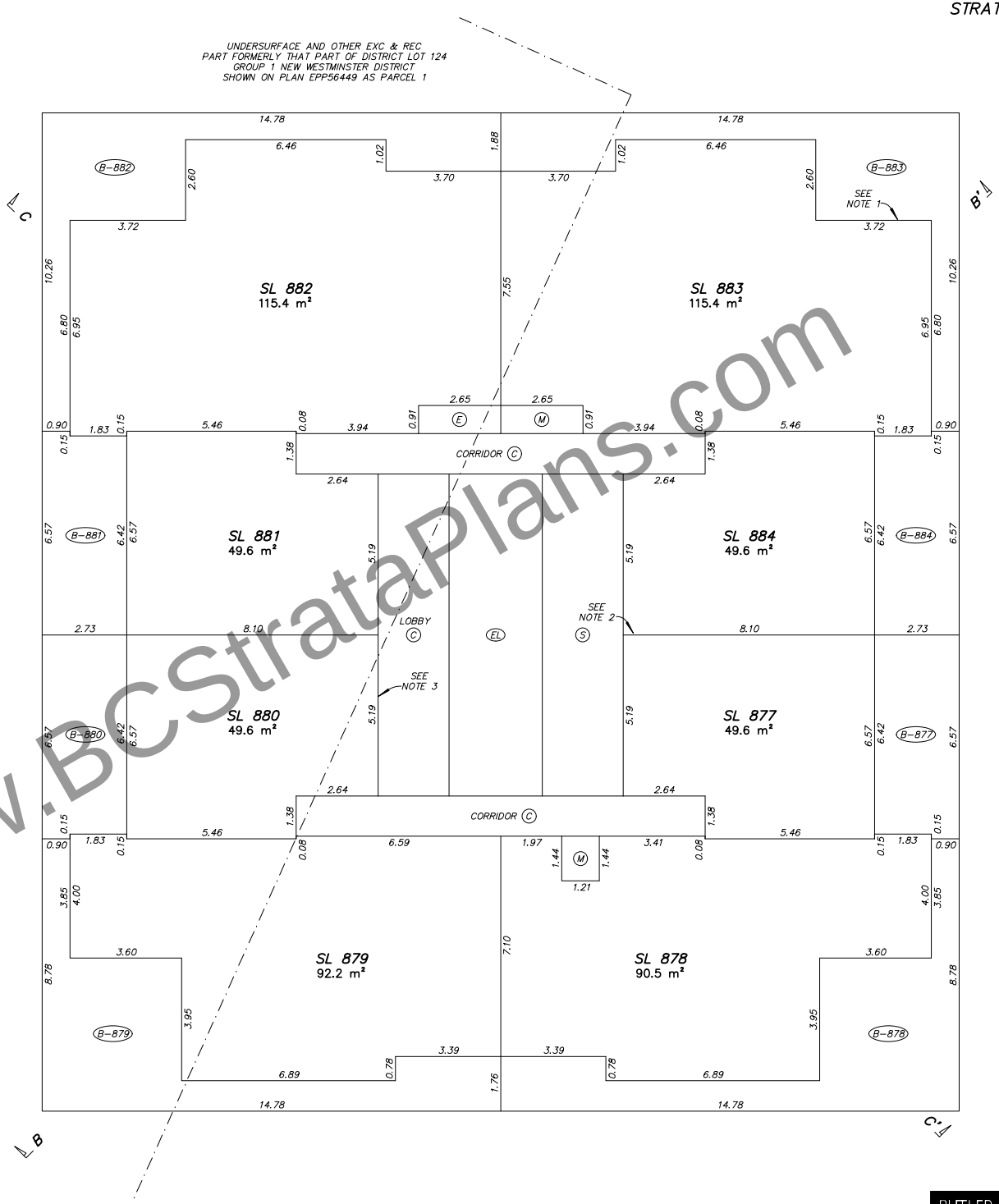

NOTES:

1. STRATA LOT BOUNDARY EXTERIOR FACE OF EXTERIOR WALLS (TYPICAL)
2. STRATA LOT BOUNDARY CENTRELINE OF DEMISING WALLS BETWEEN STRATA LOTS (TYPICAL)
3. STRATA LOT BOUNDARY EXTERIOR FACE OF WALLS ADJACENT TO COMMON AREAS (TYPICAL)
4. STRATA LOT BOUNDARY CENTRELINE FLOOR/CEILING (TYPICAL)
5. UPPER LIMIT OF LCP IS EXTENSION OF THE CENTRELINE OF THE FLOOR/CEILING ABOVE OR WHERE THERE IS NO FLOOR ABOVE, BY THE AVERAGE HEIGHT OF A STRATA LOT WITHIN THE SAME BUILDING (TYPICAL)

LEGEND

m²	DENOTES SQUARE METRES
SL	DENOTES STRATA LOT
PT	DENOTES PART
T	DENOTES TOTAL
Ex.	DENOTES EXPLANATORY
(C)	DENOTES COMMON PROPERTY
(E)	DENOTES ELECTRICAL ROOM BEING COMMON PROPERTY
(M)	DENOTES MECHANICAL ROOM BEING COMMON PROPERTY
(V)	DENOTES VESTIBULE BEING COMMON PROPERTY
(D)	DENOTES DUCT BEING COMMON PROPERTY
(S)	DENOTES STAIRS BEING COMMON PROPERTY
(EL)	DENOTES ELEVATOR BEING COMMON PROPERTY
(B-1)	DENOTES BALCONY BEING LIMITED COMMON PROPERTY FOR THE EXCLUSIVE USE OF STRATA LOT 1 (TYPICAL)
(RD-420)	DENOTES ROOF DECK BEING LIMITED COMMON PROPERTY FOR THE EXCLUSIVE USE OF STRATA LOT 420 (TYPICAL)

LCP AREAS ARE DEFINED AS TO HEIGHT BY THE CENTRE OF THE FLOOR ABOVE OR ITS EXTENSION OR WHERE THERE IS NO FLOOR ABOVE, BY THE AVERAGE HEIGHT OF A STRATA LOT WITHIN THE SAME BUILDING, UNLESS OTHERWISE NOTED

SECTION ARROWS POINT IN THE DIRECTION OF VIEW

www.BCStrataPlans.com

BUTLER SUNDVICK

JESSE MORIN, BCLS
Date: SEPTEMBER 16, 2022
File: 4772\Strata\Final
Dwg: 4772-FS

STRATA PLAN EPS8443

TOWER 2
LEVEL 49

0 5 10

SCALE 1 : 100 DISTANCES ARE IN METRES

THE INTENDED PLOT SCALE OF THIS PLAN IS 560 mm IN WIDTH BY 432 mm IN HEIGHT (C SIZE) WHEN PLOTTED AT A SCALE OF 1:100.

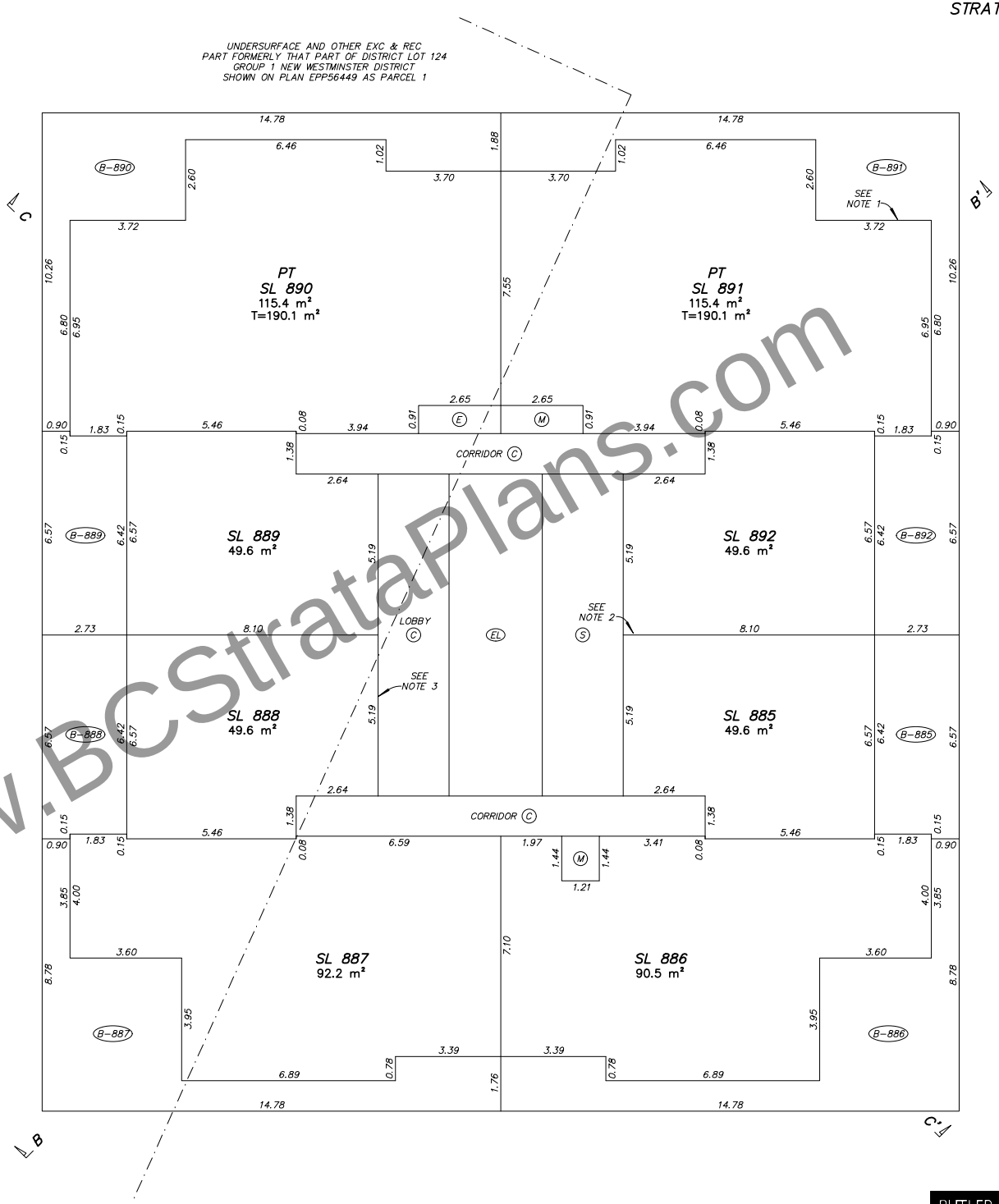

NOTES:

1. STRATA LOT BOUNDARY EXTERIOR FACE OF EXTERIOR WALLS (TYPICAL)
2. STRATA LOT BOUNDARY CENTRELINE OF DEMISING WALLS BETWEEN STRATA LOTS (TYPICAL)
3. STRATA LOT BOUNDARY EXTERIOR FACE OF WALLS ADJACENT TO COMMON AREAS (TYPICAL)
4. STRATA LOT BOUNDARY CENTRELINE FLOOR/CEILING (TYPICAL)
5. UPPER LIMIT OF LCP IS EXTENSION OF THE CENTRELINE OF THE FLOOR/CEILING ABOVE OR WHERE THERE IS NO FLOOR ABOVE, BY THE AVERAGE HEIGHT OF A STRATA LOT WITHIN THE SAME BUILDING (TYPICAL)

LEGEND

m²	DENOTES SQUARE METRES
SL	DENOTES STRATA LOT
PT	DENOTES PART
T	DENOTES TOTAL
Ex.	DENOTES EXPLANATORY
(C)	DENOTES COMMON PROPERTY
(E)	DENOTES ELECTRICAL ROOM BEING COMMON PROPERTY
(M)	DENOTES MECHANICAL ROOM BEING COMMON PROPERTY
(V)	DENOTES VESTIBULE BEING COMMON PROPERTY
(D)	DENOTES DUCT BEING COMMON PROPERTY
(S)	DENOTES STAIRS BEING COMMON PROPERTY
(EL)	DENOTES ELEVATOR BEING COMMON PROPERTY
(B-1)	DENOTES BALCONY BEING LIMITED COMMON PROPERTY FOR THE EXCLUSIVE USE OF STRATA LOT 1 (TYPICAL)
(RD-420)	DENOTES ROOF DECK BEING LIMITED COMMON PROPERTY FOR THE EXCLUSIVE USE OF STRATA LOT 420 (TYPICAL)

LCP AREAS ARE DEFINED AS TO HEIGHT BY THE CENTRE OF THE FLOOR ABOVE OR ITS EXTENSION OR WHERE THERE IS NO FLOOR ABOVE, BY THE AVERAGE HEIGHT OF A STRATA LOT WITHIN THE SAME BUILDING, UNLESS OTHERWISE NOTED

SECTION ARROWS POINT IN THE DIRECTION OF VIEW

www.BCStrataPlans.com

BUTLER SUNDVICK

JESSE MORIN, BCLS
Date: SEPTEMBER 16, 2022
File: 4772\Strata\Final
Dwg: 4772-FS

STRATA PLAN EPS8443

TOWER 2
LEVEL 50

0 5 10

SCALE 1 : 100 DISTANCES ARE IN METRES

THE INTENDED PLOT SCALE OF THIS PLAN IS 560 mm IN WIDTH BY 432 mm IN HEIGHT (C SIZE) WHEN PLOTTED AT A SCALE OF 1:100.

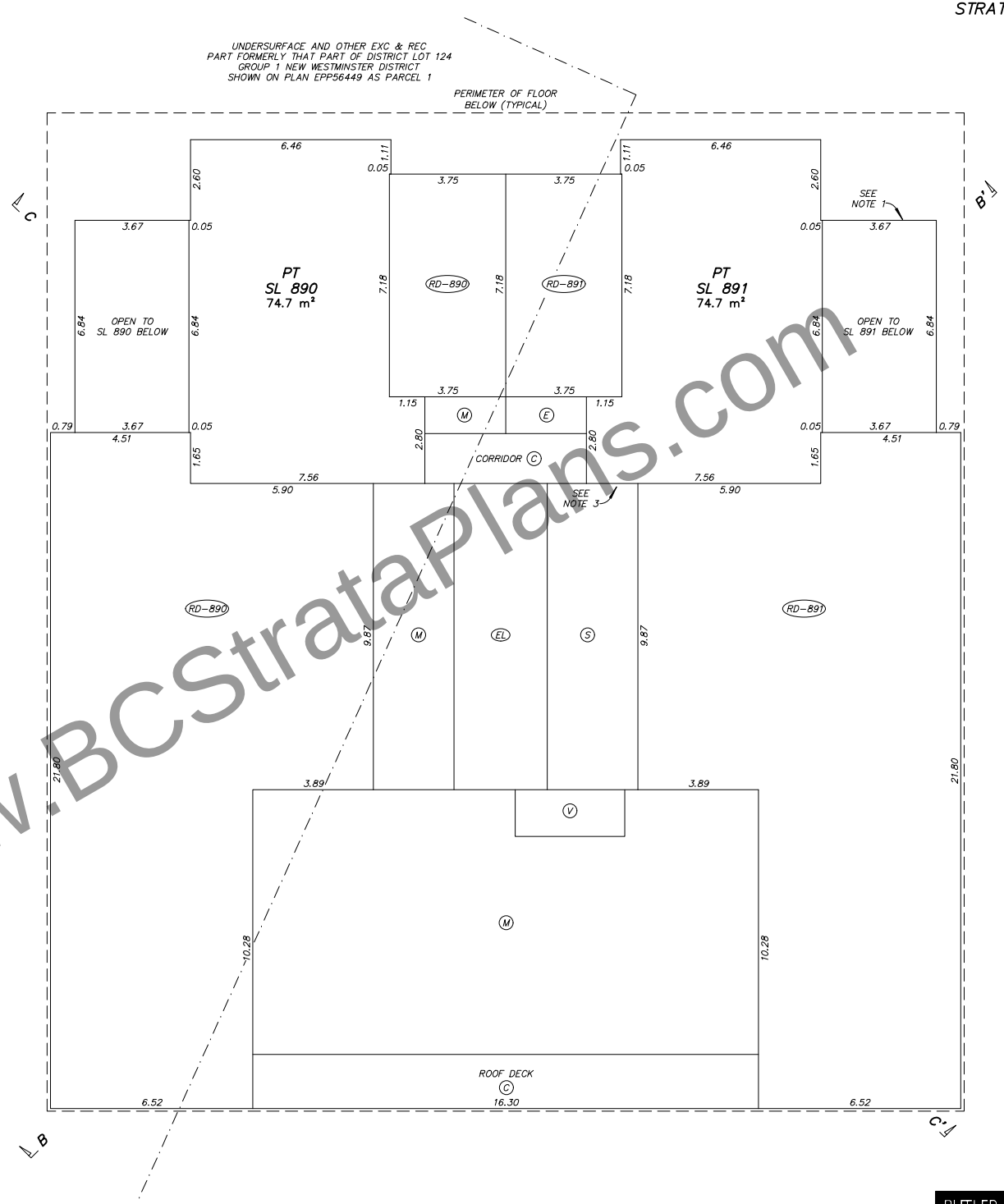

NOTES:

1. STRATA LOT BOUNDARY EXTERIOR FACE OF EXTERIOR WALLS (TYPICAL)
2. STRATA LOT BOUNDARY CENTRELINE OF DEMISING WALLS BETWEEN STRATA LOTS (TYPICAL)
3. STRATA LOT BOUNDARY EXTERIOR FACE OF WALLS ADJACENT TO COMMON AREAS (TYPICAL)
4. STRATA LOT BOUNDARY CENTRELINE FLOOR/CEILING (TYPICAL)
5. UPPER LIMIT OF LCP IS EXTENSION OF THE CENTRELINE OF THE FLOOR/CEILING ABOVE OR WHERE THERE IS NO FLOOR ABOVE, BY THE AVERAGE HEIGHT OF A STRATA LOT WITHIN THE SAME BUILDING (TYPICAL)

LEGEND

m²	DENOTES SQUARE METRES
SL	DENOTES STRATA LOT
PT	DENOTES PART
T	DENOTES TOTAL
Ex.	DENOTES EXPLANATORY
(C)	DENOTES COMMON PROPERTY
(E)	DENOTES ELECTRICAL ROOM BEING COMMON PROPERTY
(M)	DENOTES MECHANICAL ROOM BEING COMMON PROPERTY
(V)	DENOTES VESTIBULE BEING COMMON PROPERTY
(D)	DENOTES DUCT BEING COMMON PROPERTY
(S)	DENOTES STAIRS BEING COMMON PROPERTY
(EL)	DENOTES ELEVATOR BEING COMMON PROPERTY
(B-1)	DENOTES BALCONY BEING LIMITED COMMON PROPERTY FOR THE EXCLUSIVE USE OF STRATA LOT 1 (TYPICAL)
(RD-420)	DENOTES ROOF DECK BEING LIMITED COMMON PROPERTY FOR THE EXCLUSIVE USE OF STRATA LOT 420 (TYPICAL)

LCP AREAS ARE DEFINED AS TO HEIGHT BY THE CENTRE OF THE FLOOR ABOVE OR ITS EXTENSION OR WHERE THERE IS NO FLOOR ABOVE, BY THE AVERAGE HEIGHT OF A STRATA LOT WITHIN THE SAME BUILDING, UNLESS OTHERWISE NOTED

SECTION ARROWS POINT IN THE DIRECTION OF VIEW

www.BCStrataPlans.com

BUTLER SUNDVICK

JESSE MORIN, BCLS
Date: SEPTEMBER 16, 2022
File: 4772\Strata\Final
Dwg: 4772-FS

STRATA PLAN EPS8443

TOWER 2
ROOF

0 5 10

SCALE 1 : 100 DISTANCES ARE IN METRES

THE INTENDED PLOT SCALE OF THIS PLAN IS 560 mm IN WIDTH BY 432 mm IN HEIGHT (C SIZE) WHEN PLOTTED AT A SCALE OF 1:100.

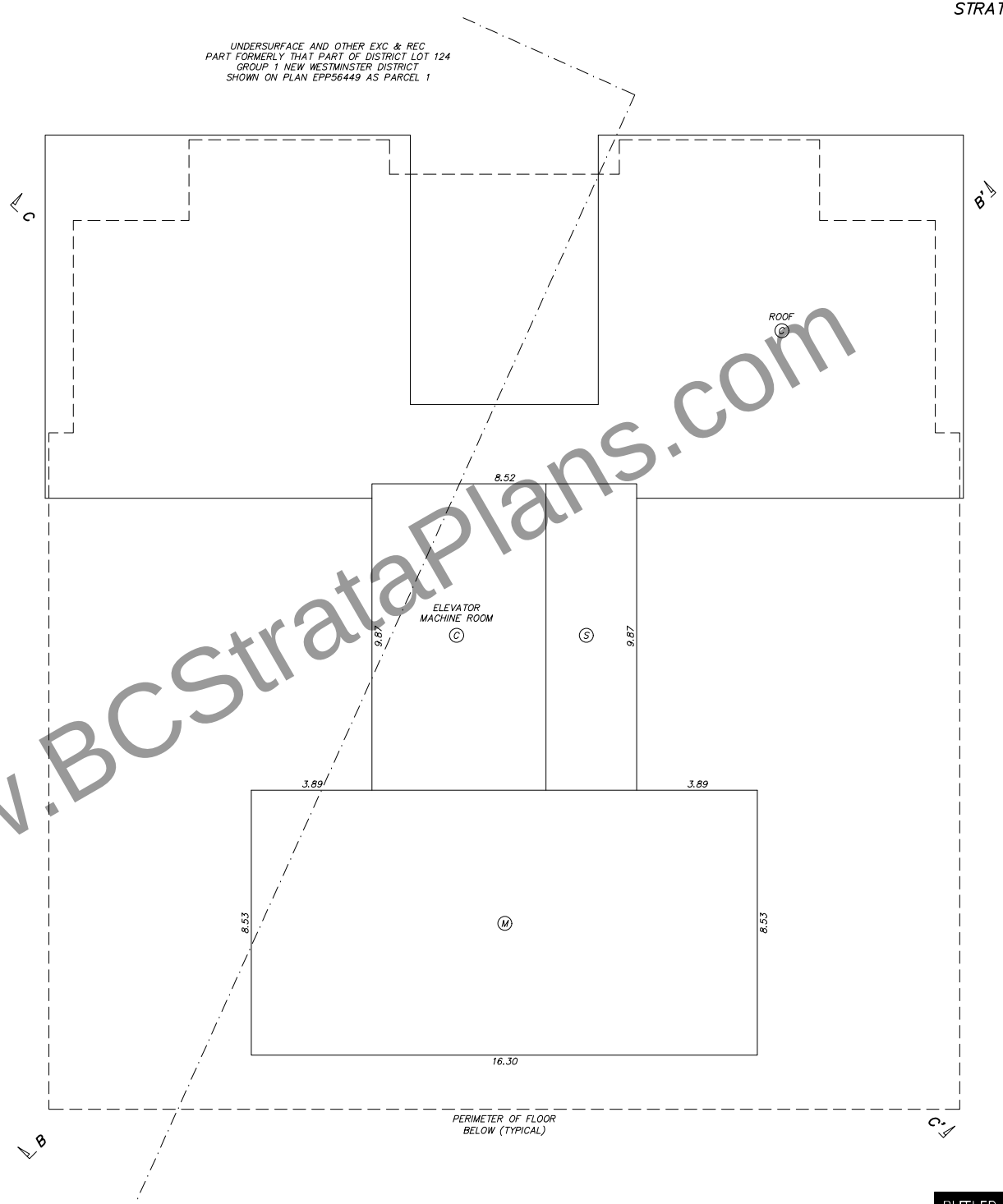

NOTES:

1. STRATA LOT BOUNDARY EXTERIOR FACE OF EXTERIOR WALLS (TYPICAL)
2. STRATA LOT BOUNDARY CENTRELINE OF DEMISING WALLS BETWEEN STRATA LOTS (TYPICAL)
3. STRATA LOT BOUNDARY EXTERIOR FACE OF WALLS ADJACENT TO COMMON AREAS (TYPICAL)
4. STRATA LOT BOUNDARY CENTRELINE FLOOR/CEILING (TYPICAL)
5. UPPER LIMIT OF LCP IS EXTENSION OF THE CENTRELINE OF THE FLOOR/CEILING ABOVE OR WHERE THERE IS NO FLOOR ABOVE, BY THE AVERAGE HEIGHT OF A STRATA LOT WITHIN THE SAME BUILDING (TYPICAL)

LEGEND

m²	DENOTES SQUARE METRES
SL	DENOTES STRATA LOT
PT	DENOTES PART
T	DENOTES TOTAL
Ex.	DENOTES EXPLANATORY
C	DENOTES COMMON PROPERTY
E	DENOTES ELECTRICAL ROOM BEING COMMON PROPERTY
M	DENOTES MECHANICAL ROOM BEING COMMON PROPERTY
V	DENOTES VESTIBULE BEING COMMON PROPERTY
D	DENOTES DUCT BEING COMMON PROPERTY
S	DENOTES STAIRS BEING COMMON PROPERTY
EL	DENOTES ELEVATOR BEING COMMON PROPERTY
B–1	DENOTES BALCONY BEING LIMITED COMMON PROPERTY FOR THE EXCLUSIVE USE OF STRATA LOT 1 (TYPICAL)
RD–420	DENOTES ROOF DECK BEING LIMITED COMMON PROPERTY FOR THE EXCLUSIVE USE OF STRATA LOT 420 (TYPICAL)

LCP AREAS ARE DEFINED AS TO HEIGHT BY THE CENTRE OF THE FLOOR ABOVE OR ITS EXTENSION OR WHERE THERE IS NO FLOOR ABOVE, BY THE AVERAGE HEIGHT OF A STRATA LOT WITHIN THE SAME BUILDING, UNLESS OTHERWISE NOTED

SECTION ARROWS POINT IN THE DIRECTION OF VIEW

www.BCStrataPlans.com

BUTLER SUNDVICK

JESSE MORIN, BCLS
Date: SEPTEMBER 16, 2022
File: 4772\Strata\Final
Dwg: 4772–FS

STRATA PLAN EPS8443

TOWER 1
CROSS SECTION A–A'

0 5 10 15

SCALE 1 : 150 DISTANCES ARE IN METRES

THE INTENDED PLOT SCALE OF THIS PLAN IS 560 mm IN WIDTH BY 432 mm IN HEIGHT (C SIZE) WHEN PLOTTED AT A SCALE OF 1:150.

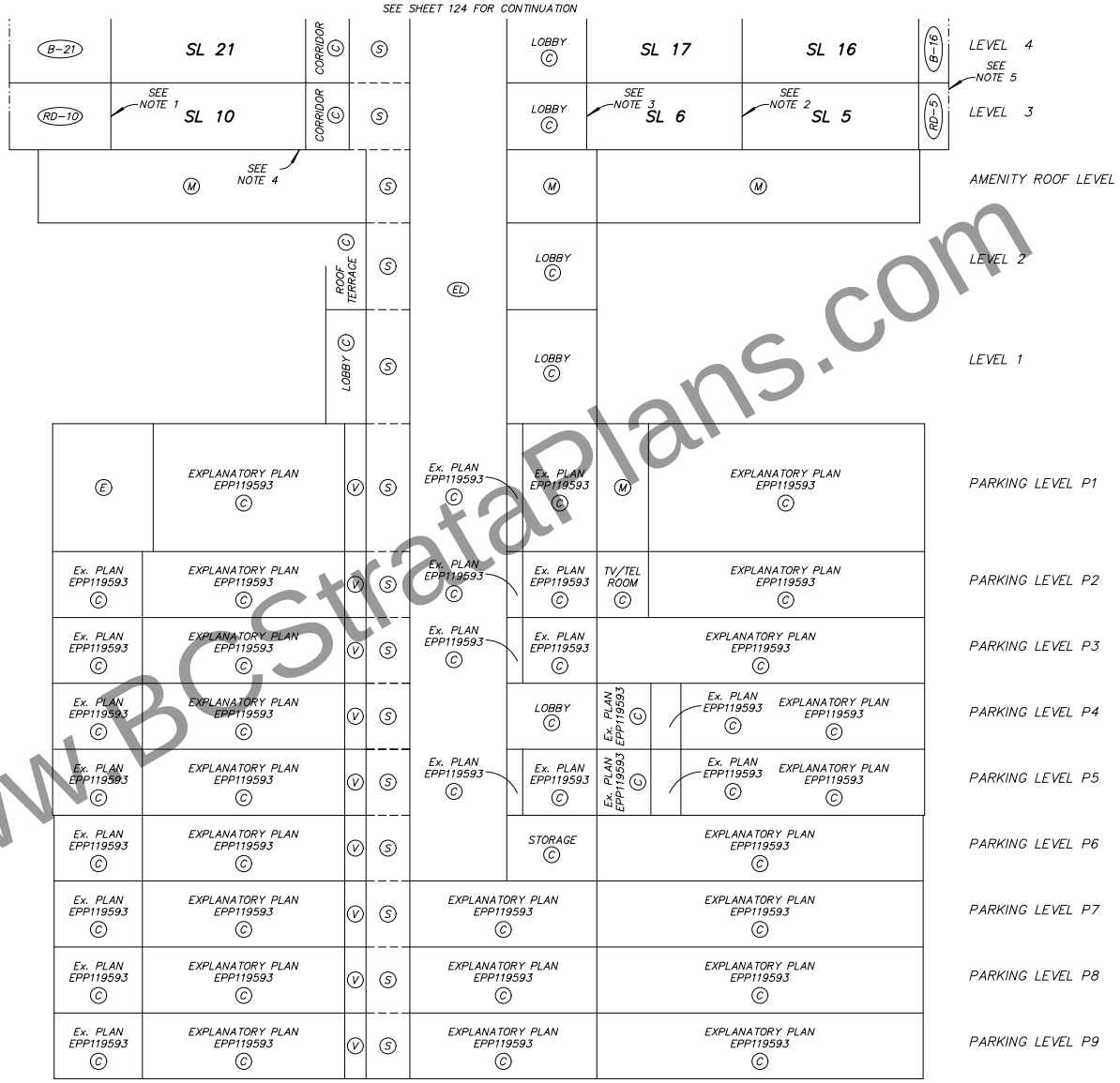

NOTES:

1. STRATA LOT BOUNDARY EXTERIOR FACE OF EXTERIOR WALLS (TYPICAL)
2. STRATA LOT BOUNDARY CENTRELINE OF DEMISING WALLS BETWEEN STRATA LOTS (TYPICAL)
3. STRATA LOT BOUNDARY EXTERIOR FACE OF WALLS ADJACENT TO COMMON AREAS (TYPICAL)
4. STRATA LOT BOUNDARY CENTRELINE FLOOR/CEILING (TYPICAL)
5. UPPER LIMIT OF LCP IS EXTENSION OF THE CENTRELINE OF THE FLOOR/CEILING ABOVE OR WHERE THERE IS NO FLOOR ABOVE, BY THE AVERAGE HEIGHT OF A STRATA LOT WITHIN THE SAME BUILDING (TYPICAL)

LEGEND

m^2	DENOTES SQUARE METRES
SL	DENOTES STRATA LOT
PT	DENOTES PART
T	DENOTES TOTAL
Ex.	DENOTES EXPLANATORY
(C)	DENOTES COMMON PROPERTY
(E)	DENOTES ELECTRICAL ROOM BEING COMMON PROPERTY
(M)	DENOTES MECHANICAL ROOM BEING COMMON PROPERTY
(V)	DENOTES VESTIBULE BEING COMMON PROPERTY
(D)	DENOTES DUCT BEING COMMON PROPERTY
(S)	DENOTES STAIRS BEING COMMON PROPERTY
(EL)	DENOTES ELEVATOR BEING COMMON PROPERTY
(B–1)	DENOTES BALCONY BEING LIMITED COMMON PROPERTY FOR THE EXCLUSIVE USE OF STRATA LOT 1 (TYPICAL)
(RD–420)	DENOTES ROOF DECK BEING LIMITED COMMON PROPERTY FOR THE EXCLUSIVE USE OF STRATA LOT 420 (TYPICAL)

LCP AREAS ARE DEFINED AS TO HEIGHT BY THE CENTRE OF THE FLOOR ABOVE OR ITS EXTENSION OR WHERE THERE IS NO FLOOR ABOVE, BY THE AVERAGE HEIGHT OF A STRATA LOT WITHIN THE SAME BUILDING, UNLESS OTHERWISE NOTED

SECTION ARROWS POINT IN THE DIRECTION OF VIEW

www.BCStrataPlans.com

BUTLER SUNDVICK

JESSE MORIN, BCLS
Date: SEPTEMBER 16, 2022
File: 4772\Strata\Final
Dwg: 4772–FS

TOWER 1
CROSS SECTION A–A'

0 5 10 15

SCALE 1 : 150 DISTANCES ARE IN METRES

THE INTENDED PLOT SCALE OF THIS PLAN IS 560 mm IN WIDTH BY 432 mm IN HEIGHT (C SIZE) WHEN PLOTTED AT A SCALE OF 1:150.

SEE SHEET 125 FOR CONTINUATION

B–175	SL 175	CORRIDOR (C)	(S)		LOBBY (C)	SL 171	SL 170	B–170	LEVEL 18
B–164	SL 164	CORRIDOR (C)	(S)		LOBBY (C)	SL 160	SL 159	B–159	LEVEL 17
B–153	SL 153	CORRIDOR (C)	(S)		LOBBY (C)	SL 149	SL 148	B–148	LEVEL 16
B–142	SL 142	CORRIDOR (C)	(S)		LOBBY (C)	SL 138	SL 137	B–137	LEVEL 15
B–131	SL 131	CORRIDOR (C)	(S)		LOBBY (C)	SL 127	SL 126	B–126	LEVEL 14
B–120	SL 120	CORRIDOR (C)	(S)		LOBBY (C)	SL 116	SL 115	B–115	LEVEL 13
B–109	SL 109	CORRIDOR (C)	(S)		LOBBY (C)	SL 105	SL 104	B–104	LEVEL 12
B–98	SEE NOTE 1 SL 98	CORRIDOR (C)	(S)		LOBBY (C)	SEE NOTE 3 SL 94	SEE NOTE 2 SL 93	B–93	LEVEL 11 (SEE NOTE 5)
B–87	SL 87 (SEE NOTE 4)	CORRIDOR (C)	(S)	(EL)	LOBBY (C)	SL 83	SL 82	B–82	LEVEL 10
B–76	SL 76	CORRIDOR (C)	(S)		LOBBY (C)	SL 72	SL 71	B–71	LEVEL 9
B–65	SL 65	CORRIDOR (C)	(S)		LOBBY (C)	SL 61	SL 60	B–60	LEVEL 8
B–54	SL 54	CORRIDOR (C)	(S)		LOBBY (C)	SL 50	SL 49	B–49	LEVEL 7
B–43	SL 43	CORRIDOR (C)	(S)		LOBBY (C)	SL 39	SL 38	B–38	LEVEL 6
B–32	SL 32	CORRIDOR (C)	(S)		LOBBY (C)	SL 28	SL 27	B–27	LEVEL 5
B–21	SL 21	CORRIDOR (C)	(S)		LOBBY (C)	SL 17	SL 16	B–16	LEVEL 4
RD–10	SL 10	CORRIDOR (C)	(S)		LOBBY (C)	SL 6	SL 5	RD–5	LEVEL 3

SEE SHEET 123 FOR CONTINUATION

NOTES:

1. STRATA LOT BOUNDARY EXTERIOR FACE OF EXTERIOR WALLS (TYPICAL)
2. STRATA LOT BOUNDARY CENTRELINE OF DEMISING WALLS BETWEEN STRATA LOTS (TYPICAL)
3. STRATA LOT BOUNDARY EXTERIOR FACE OF WALLS ADJACENT TO COMMON AREAS (TYPICAL)
4. STRATA LOT BOUNDARY CENTRELINE FLOOR/CEILING (TYPICAL)
5. UPPER LIMIT OF LCP IS EXTENSION OF THE CENTRELINE OF THE FLOOR/CEILING ABOVE OR WHERE THERE IS NO FLOOR ABOVE, BY THE AVERAGE HEIGHT OF A STRATA LOT WITHIN THE SAME BUILDING (TYPICAL)

LEGEND

m^2	DENOTES SQUARE METRES
SL	DENOTES STRATA LOT
PT	DENOTES PART
T	DENOTES TOTAL
Ex.	DENOTES EXPLANATORY
(C)	DENOTES COMMON PROPERTY
(E)	DENOTES ELECTRICAL ROOM BEING COMMON PROPERTY
(M)	DENOTES MECHANICAL ROOM BEING COMMON PROPERTY
(V)	DENOTES VESTIBULE BEING COMMON PROPERTY
(D)	DENOTES DUCT BEING COMMON PROPERTY
(S)	DENOTES STAIRS BEING COMMON PROPERTY
(EL)	DENOTES ELEVATOR BEING COMMON PROPERTY
(B–1)	DENOTES BALCONY BEING LIMITED COMMON PROPERTY FOR THE EXCLUSIVE USE OF STRATA LOT 1 (TYPICAL)
(RD–420)	DENOTES ROOF DECK BEING LIMITED COMMON PROPERTY FOR THE EXCLUSIVE USE OF STRATA LOT 420 (TYPICAL)

LCP AREAS ARE DEFINED AS TO HEIGHT BY THE CENTRE OF THE FLOOR ABOVE OR ITS EXTENSION OR WHERE THERE IS NO FLOOR ABOVE, BY THE AVERAGE HEIGHT OF A STRATA LOT WITHIN THE SAME BUILDING, UNLESS OTHERWISE NOTED

SECTION ARROWS POINT IN THE DIRECTION OF VIEW

www.BCStrataPlans.com

BUTLER SUNDVICK
JESSE MORIN, BCLS
Date: SEPTEMBER 16, 2022
File: 4772\Strata\Final
Dwg: 4772–FS

STRATA PLAN EPS8443

TOWER 1
CROSS SECTION A–A'

0 5 10 15

SCALE 1 : 150 DISTANCES ARE IN METRES

THE INTENDED PLOT SCALE OF THIS PLAN IS 560 mm IN WIDTH BY 432 mm IN HEIGHT (C SIZE) WHEN PLOTTED AT A SCALE OF 1:150.

SEE SHEET 126 FOR CONTINUATION

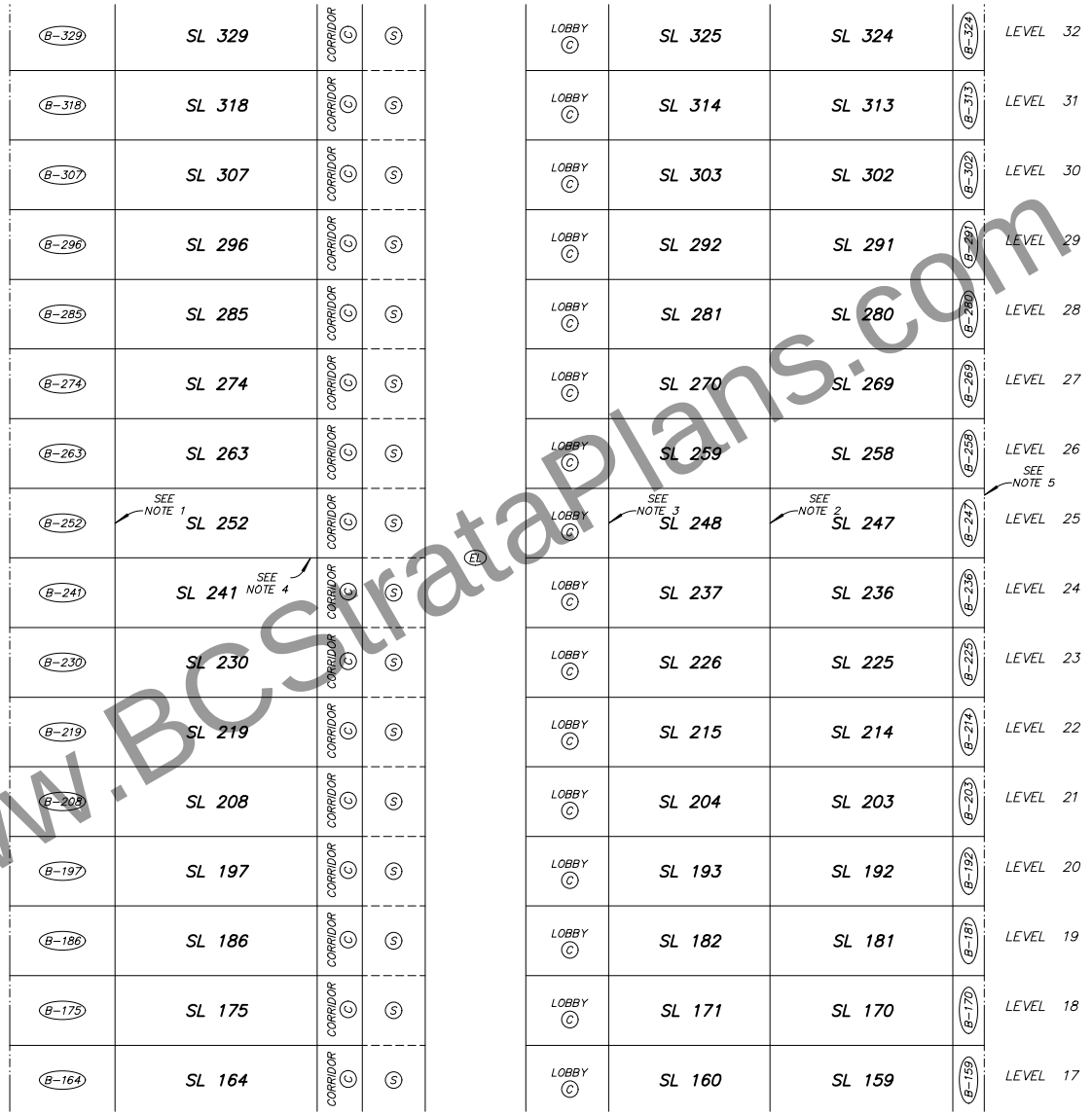

SEE SHEET 124 FOR CONTINUATION

NOTES:

1. STRATA LOT BOUNDARY EXTERIOR FACE OF EXTERIOR WALLS (TYPICAL)
2. STRATA LOT BOUNDARY CENTRELINE OF DEMISING WALLS BETWEEN STRATA LOTS (TYPICAL)
3. STRATA LOT BOUNDARY EXTERIOR FACE OF WALLS ADJACENT TO COMMON AREAS (TYPICAL)
4. STRATA LOT BOUNDARY CENTRELINE FLOOR/CEILING (TYPICAL)
5. UPPER LIMIT OF LCP IS EXTENSION OF THE CENTRELINE OF THE FLOOR/CEILING ABOVE OR WHERE THERE IS NO FLOOR ABOVE, BY THE AVERAGE HEIGHT OF A STRATA LOT WITHIN THE SAME BUILDING (TYPICAL)

LEGEND

m^2	DENOTES SQUARE METRES
SL	DENOTES STRATA LOT
PT	DENOTES PART
T	DENOTES TOTAL
Ex.	DENOTES EXPLANATORY
C	DENOTES COMMON PROPERTY
E	DENOTES ELECTRICAL ROOM BEING COMMON PROPERTY
M	DENOTES MECHANICAL ROOM BEING COMMON PROPERTY
V	DENOTES VESTIBULE BEING COMMON PROPERTY
D	DENOTES DUCT BEING COMMON PROPERTY
S	DENOTES STAIRS BEING COMMON PROPERTY
EL	DENOTES ELEVATOR BEING COMMON PROPERTY
B–1	DENOTES BALCONY BEING LIMITED COMMON PROPERTY FOR THE EXCLUSIVE USE OF STRATA LOT 1 (TYPICAL)
RD–420	DENOTES ROOF DECK BEING LIMITED COMMON PROPERTY FOR THE EXCLUSIVE USE OF STRATA LOT 420 (TYPICAL)

LCP AREAS ARE DEFINED AS TO HEIGHT BY THE CENTRE OF THE FLOOR ABOVE OR ITS EXTENSION OR WHERE THERE IS NO FLOOR ABOVE, BY THE AVERAGE HEIGHT OF A STRATA LOT WITHIN THE SAME BUILDING, UNLESS OTHERWISE NOTED

SECTION ARROWS POINT IN THE DIRECTION OF VIEW

www.BCStrataPlans.com

BUTLER SUNDVICK

JESSE MORIN, BCLS
Date: SEPTEMBER 16, 2022
File: 4772\Strata\Final
Dwg: 4772–FS

TOWER 1
CROSS SECTION A–A'

0 5 10 15

SCALE 1 : 150 DISTANCES ARE IN METRES

THE INTENDED PLOT SCALE OF THIS PLAN IS 560 mm IN WIDTH BY 432 mm IN HEIGHT (C SIZE) WHEN PLOTTED AT A SCALE OF 1:150.

NOTES:

1. STRATA LOT BOUNDARY EXTERIOR FACE OF EXTERIOR WALLS (TYPICAL)
2. STRATA LOT BOUNDARY CENTRELINE OF DEMISING WALLS BETWEEN STRATA LOTS (TYPICAL)
3. STRATA LOT BOUNDARY EXTERIOR FACE OF WALLS ADJACENT TO COMMON AREAS (TYPICAL)
4. STRATA LOT BOUNDARY CENTRELINE FLOOR/CEILING (TYPICAL)
5. UPPER LIMIT OF LCP IS EXTENSION OF THE CENTRELINE OF THE FLOOR/CEILING ABOVE OR WHERE THERE IS NO FLOOR ABOVE, BY THE AVERAGE HEIGHT OF A STRATA LOT WITHIN THE SAME BUILDING (TYPICAL)

LEGEND

m²	DENOTES SQUARE METRES
SL	DENOTES STRATA LOT
PT	DENOTES PART
T	DENOTES TOTAL
Ex.	DENOTES EXPLANATORY
(C)	DENOTES COMMON PROPERTY
(E)	DENOTES ELECTRICAL ROOM BEING COMMON PROPERTY
(M)	DENOTES MECHANICAL ROOM BEING COMMON PROPERTY
(V)	DENOTES VESTIBULE BEING COMMON PROPERTY
(D)	DENOTES DUCT BEING COMMON PROPERTY
(S)	DENOTES STAIRS BEING COMMON PROPERTY
(EL)	DENOTES ELEVATOR BEING COMMON PROPERTY
(B–1)	DENOTES BALCONY BEING LIMITED COMMON PROPERTY FOR THE EXCLUSIVE USE OF STRATA LOT 1 (TYPICAL)
(RD–420)	DENOTES ROOF DECK BEING LIMITED COMMON PROPERTY FOR THE EXCLUSIVE USE OF STRATA LOT 420 (TYPICAL)

LCP AREAS ARE DEFINED AS TO HEIGHT BY THE CENTRE OF THE FLOOR ABOVE OR ITS EXTENSION OR WHERE THERE IS NO FLOOR ABOVE, BY THE AVERAGE HEIGHT OF A STRATA LOT WITHIN THE SAME BUILDING, UNLESS OTHERWISE NOTED

SECTION ARROWS POINT IN THE DIRECTION OF VIEW

www.BCStrataPlans.com

BUTLER SUNDVICK

JESSE MORIN, BCLS
Date: SEPTEMBER 16, 2022
File: 4772\Strata\Final
Dwg: 4772–FS

STRATA PLAN EPS8443

TOWER 1
CROSS SECTION B–B'

0 5 10 15

SCALE 1 : 150 DISTANCES ARE IN METRES

THE INTENDED PLOT SCALE OF THIS PLAN IS 560 mm IN WIDTH BY 432 mm IN HEIGHT (C SIZE) WHEN PLOTTED AT A SCALE OF 1:150.

LCP AREAS ARE DEFINED AS TO HEIGHT BY THE CENTRE OF THE FLOOR ABOVE OR ITS EXTENSION OR WHERE THERE IS NO FLOOR ABOVE, BY THE AVERAGE HEIGHT OF A STRATA LOT WITHIN THE SAME BUILDING, UNLESS OTHERWISE NOTED

SECTION ARROWS POINT IN THE DIRECTION OF VIEW

NOTES:

1. STRATA LOT BOUNDARY EXTERIOR FACE OF EXTERIOR WALLS (TYPICAL)
2. STRATA LOT BOUNDARY CENTRELINE OF DEMISING WALLS BETWEEN STRATA LOTS (TYPICAL)
3. STRATA LOT BOUNDARY EXTERIOR FACE OF WALLS ADJACENT TO COMMON AREAS (TYPICAL)
4. STRATA LOT BOUNDARY CENTRELINE FLOOR/CEILING (TYPICAL)
5. UPPER LIMIT OF LCP IS EXTENSION OF THE CENTRELINE OF THE FLOOR/CEILING ABOVE OR WHERE THERE IS NO FLOOR ABOVE, BY THE AVERAGE HEIGHT OF A STRATA LOT WITHIN THE SAME BUILDING (TYPICAL)

LEGEND

m²	DENOTES SQUARE METRES
SL	DENOTES STRATA LOT
PT	DENOTES PART
T	DENOTES TOTAL
Ex.	DENOTES EXPLANATORY
C	DENOTES COMMON PROPERTY
E	DENOTES ELECTRICAL ROOM BEING COMMON PROPERTY
M	DENOTES MECHANICAL ROOM BEING COMMON PROPERTY
V	DENOTES VESTIBULE BEING COMMON PROPERTY
D	DENOTES DUCT BEING COMMON PROPERTY
S	DENOTES STAIRS BEING COMMON PROPERTY
EL	DENOTES ELEVATOR BEING COMMON PROPERTY
B–1	DENOTES BALCONY BEING LIMITED COMMON PROPERTY FOR THE EXCLUSIVE USE OF STRATA LOT 1 (TYPICAL)
RD–420	DENOTES ROOF DECK BEING LIMITED COMMON PROPERTY FOR THE EXCLUSIVE USE OF STRATA LOT 420 (TYPICAL)

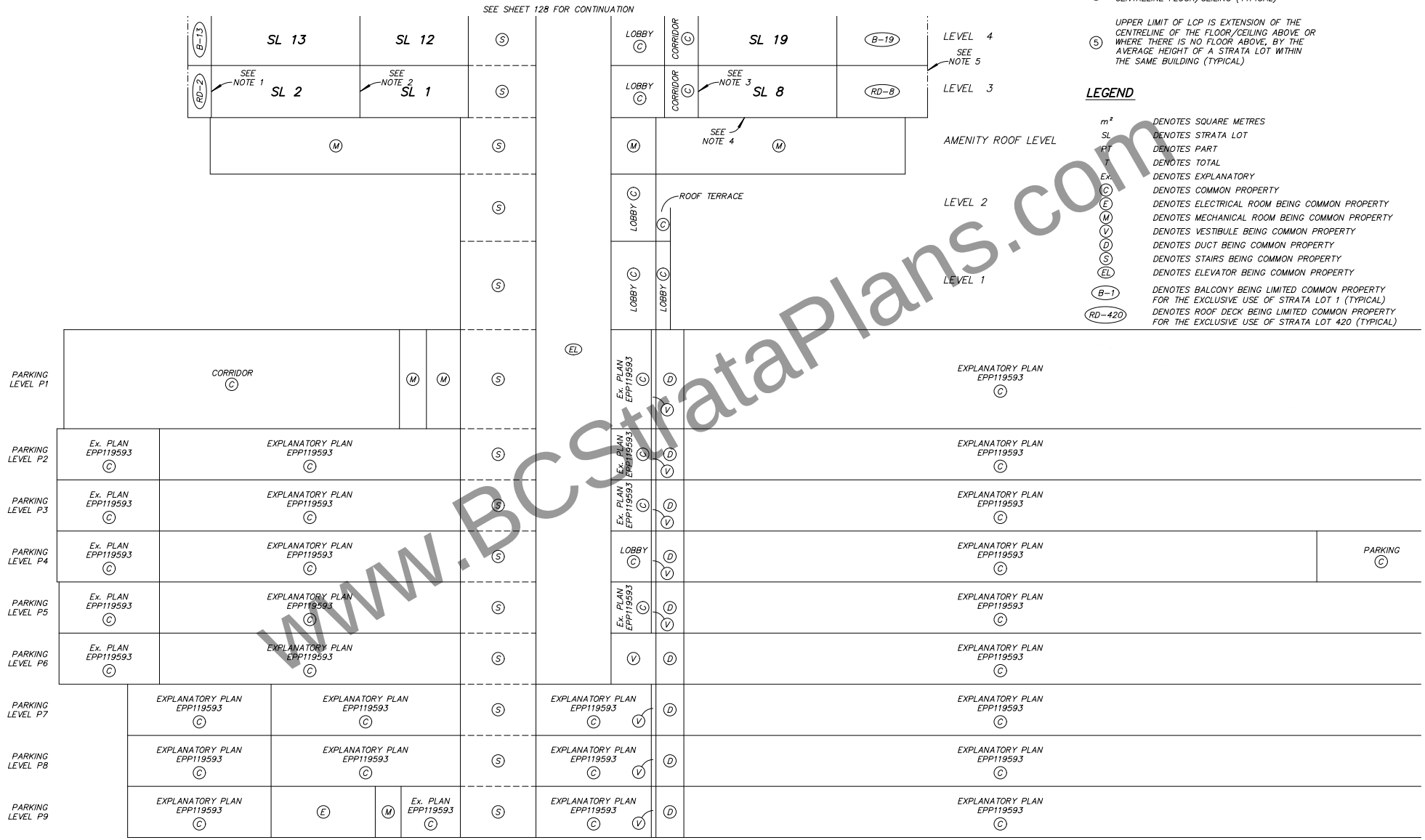

www.BCStrataPlans.com

BUTLER SUNDVICK

JESSE MORIN, BCLS
Date: SEPTEMBER 16, 2022
File: 4772\Strata\Final
Dwg: 4772–FS

TOWER 1
CROSS SECTION B–B'

0 5 10 15

SCALE 1 : 150 DISTANCES ARE IN METRES

THE INTENDED PLOT SCALE OF THIS PLAN IS 560 mm IN WIDTH BY 432 mm IN HEIGHT (C SIZE) WHEN PLOTTED AT A SCALE OF 1:150.

SEE SHEET 129 FOR CONTINUATION

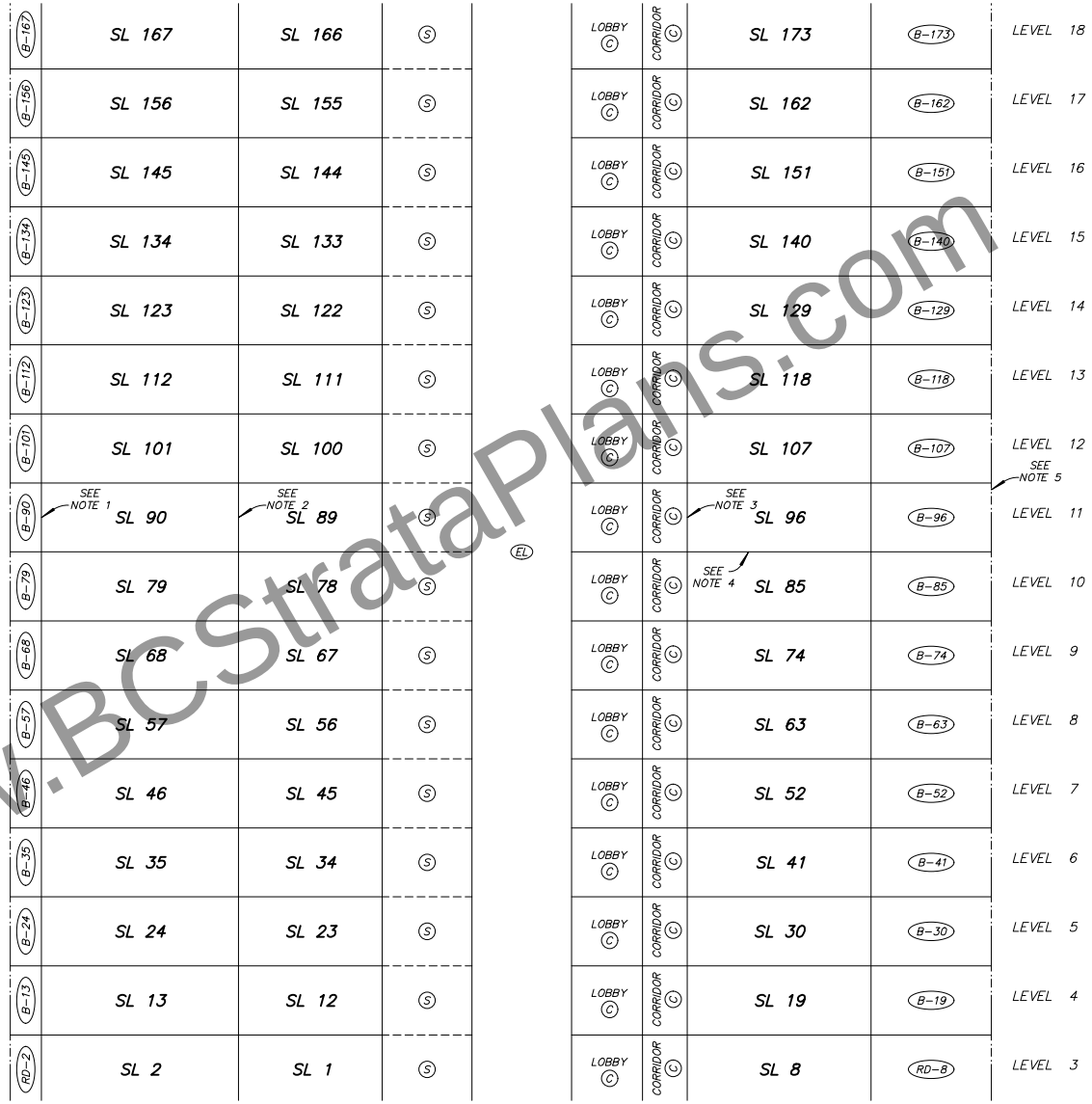

SEE SHEET 127 FOR CONTINUATION

NOTES:

1. STRATA LOT BOUNDARY EXTERIOR FACE OF EXTERIOR WALLS (TYPICAL)
2. STRATA LOT BOUNDARY CENTRELINE OF DEMISING WALLS BETWEEN STRATA LOTS (TYPICAL)
3. STRATA LOT BOUNDARY EXTERIOR FACE OF WALLS ADJACENT TO COMMON AREAS (TYPICAL)
4. STRATA LOT BOUNDARY CENTRELINE FLOOR/CEILING (TYPICAL)
5. UPPER LIMIT OF LCP IS EXTENSION OF THE CENTRELINE OF THE FLOOR/CEILING ABOVE OR WHERE THERE IS NO FLOOR ABOVE, BY THE AVERAGE HEIGHT OF A STRATA LOT WITHIN THE SAME BUILDING (TYPICAL)

LEGEND

m^2	DENOTES SQUARE METRES
SL	DENOTES STRATA LOT
PT	DENOTES PART
T	DENOTES TOTAL
Ex.	DENOTES EXPLANATORY
(C)	DENOTES COMMON PROPERTY
(E)	DENOTES ELECTRICAL ROOM BEING COMMON PROPERTY
(M)	DENOTES MECHANICAL ROOM BEING COMMON PROPERTY
(V)	DENOTES VESTIBULE BEING COMMON PROPERTY
(D)	DENOTES DUCT BEING COMMON PROPERTY
(S)	DENOTES STAIRS BEING COMMON PROPERTY
(EL)	DENOTES ELEVATOR BEING COMMON PROPERTY
(B–1)	DENOTES BALCONY BEING LIMITED COMMON PROPERTY FOR THE EXCLUSIVE USE OF STRATA LOT 1 (TYPICAL)
(RD–420)	DENOTES ROOF DECK BEING LIMITED COMMON PROPERTY FOR THE EXCLUSIVE USE OF STRATA LOT 420 (TYPICAL)

LCP AREAS ARE DEFINED AS TO HEIGHT BY THE CENTRE OF THE FLOOR ABOVE OR ITS EXTENSION OR WHERE THERE IS NO FLOOR ABOVE, BY THE AVERAGE HEIGHT OF A STRATA LOT WITHIN THE SAME BUILDING, UNLESS OTHERWISE NOTED

SECTION ARROWS POINT IN THE DIRECTION OF VIEW

www.BCStrataPlans.com

BUTLER SUNDVICK

JESSE MORIN, BCLS
Date: SEPTEMBER 16, 2022
File: 4772\Strata\Final
Dwg: 4772–FS

TOWER 1
CROSS SECTION B–B'

0 5 10 15

SCALE 1 : 150 DISTANCES ARE IN METRES

THE INTENDED PLOT SCALE OF THIS PLAN IS 560 mm IN WIDTH BY 432 mm IN HEIGHT (C SIZE) WHEN PLOTTED AT A SCALE OF 1:150.

SEE SHEET 130 FOR CONTINUATION

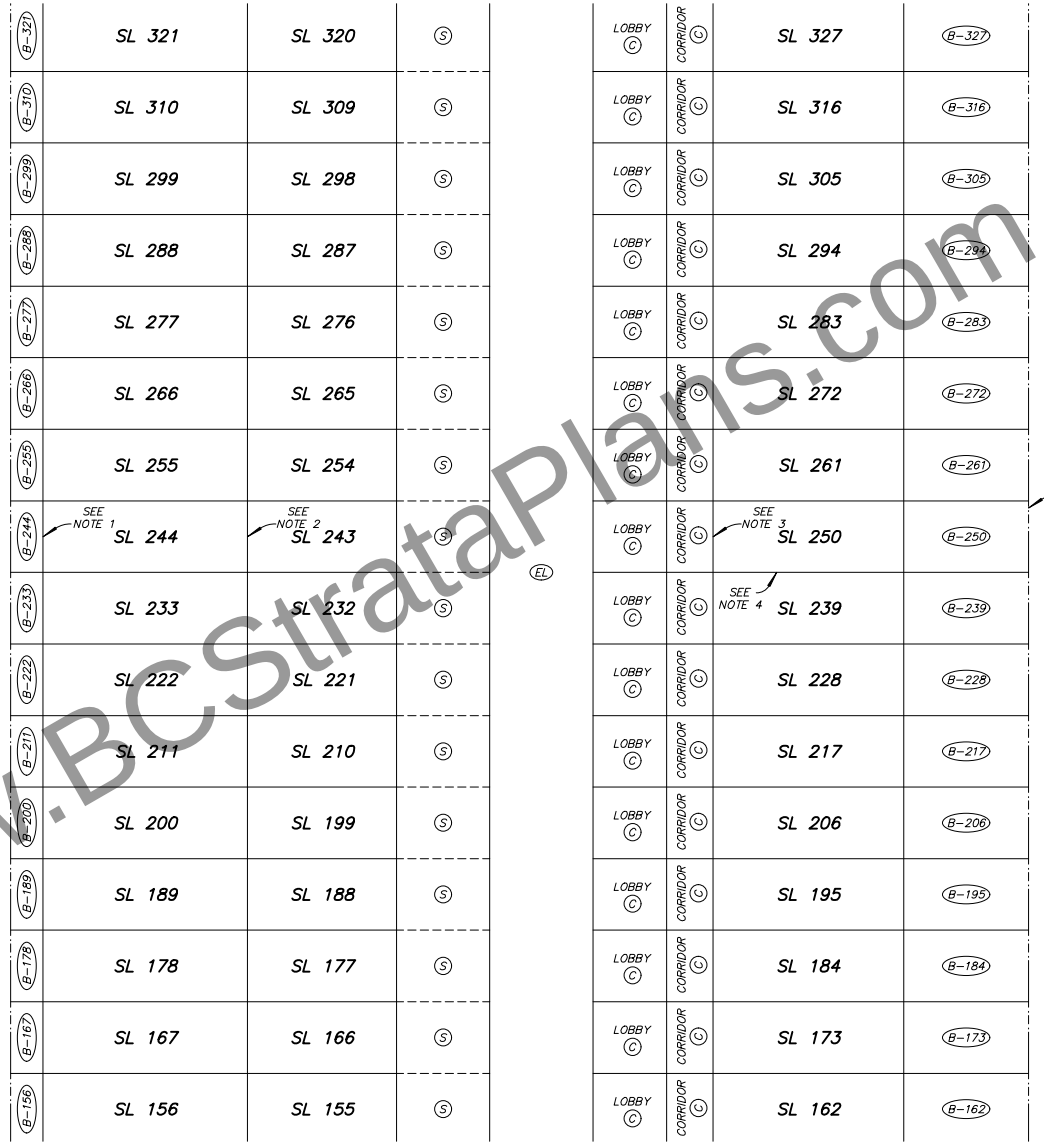

SEE SHEET 128 FOR CONTINUATION

NOTES:

1. STRATA LOT BOUNDARY EXTERIOR FACE OF EXTERIOR WALLS (TYPICAL)
2. STRATA LOT BOUNDARY CENTRELINE OF DEMISING WALLS BETWEEN STRATA LOTS (TYPICAL)
3. STRATA LOT BOUNDARY EXTERIOR FACE OF WALLS ADJACENT TO COMMON AREAS (TYPICAL)
4. STRATA LOT BOUNDARY CENTRELINE FLOOR/CEILING (TYPICAL)
5. UPPER LIMIT OF LCP IS EXTENSION OF THE CENTRELINE OF THE FLOOR/CEILING ABOVE OR WHERE THERE IS NO FLOOR ABOVE, BY THE AVERAGE HEIGHT OF A STRATA LOT WITHIN THE SAME BUILDING (TYPICAL)

LEGEND

m²	DENOTES SQUARE METRES
SL	DENOTES STRATA LOT
PT	DENOTES PART
T	DENOTES TOTAL
Ex.	DENOTES EXPLANATORY
(C)	DENOTES COMMON PROPERTY
(E)	DENOTES ELECTRICAL ROOM BEING COMMON PROPERTY
(M)	DENOTES MECHANICAL ROOM BEING COMMON PROPERTY
(V)	DENOTES VESTIBULE BEING COMMON PROPERTY
(D)	DENOTES DUCT BEING COMMON PROPERTY
(S)	DENOTES STAIRS BEING COMMON PROPERTY
(EL)	DENOTES ELEVATOR BEING COMMON PROPERTY
(B–1)	DENOTES BALCONY BEING LIMITED COMMON PROPERTY FOR THE EXCLUSIVE USE OF STRATA LOT 1 (TYPICAL)
(RD–420)	DENOTES ROOF DECK BEING LIMITED COMMON PROPERTY FOR THE EXCLUSIVE USE OF STRATA LOT 420 (TYPICAL)

LCP AREAS ARE DEFINED AS TO HEIGHT BY THE CENTRE OF THE FLOOR ABOVE OR ITS EXTENSION OR WHERE THERE IS NO FLOOR ABOVE, BY THE AVERAGE HEIGHT OF A STRATA LOT WITHIN THE SAME BUILDING, UNLESS OTHERWISE NOTED

SECTION ARROWS POINT IN THE DIRECTION OF VIEW

www.BCStrataPlans.com

BUTLER SUNDVICK

JESSE MORIN, BCLS
Date: SEPTEMBER 16, 2022
File: 4772\Strata\Final
Dwg: 4772–FS

TOWER 1
CROSS SECTION B–B'

0 5 10 15

SCALE 1 : 150 DISTANCES ARE IN METRES

THE INTENDED PLOT SCALE OF THIS PLAN IS 560 mm IN WIDTH BY 432 mm IN HEIGHT (C SIZE) WHEN PLOTTED AT A SCALE OF 1:150.

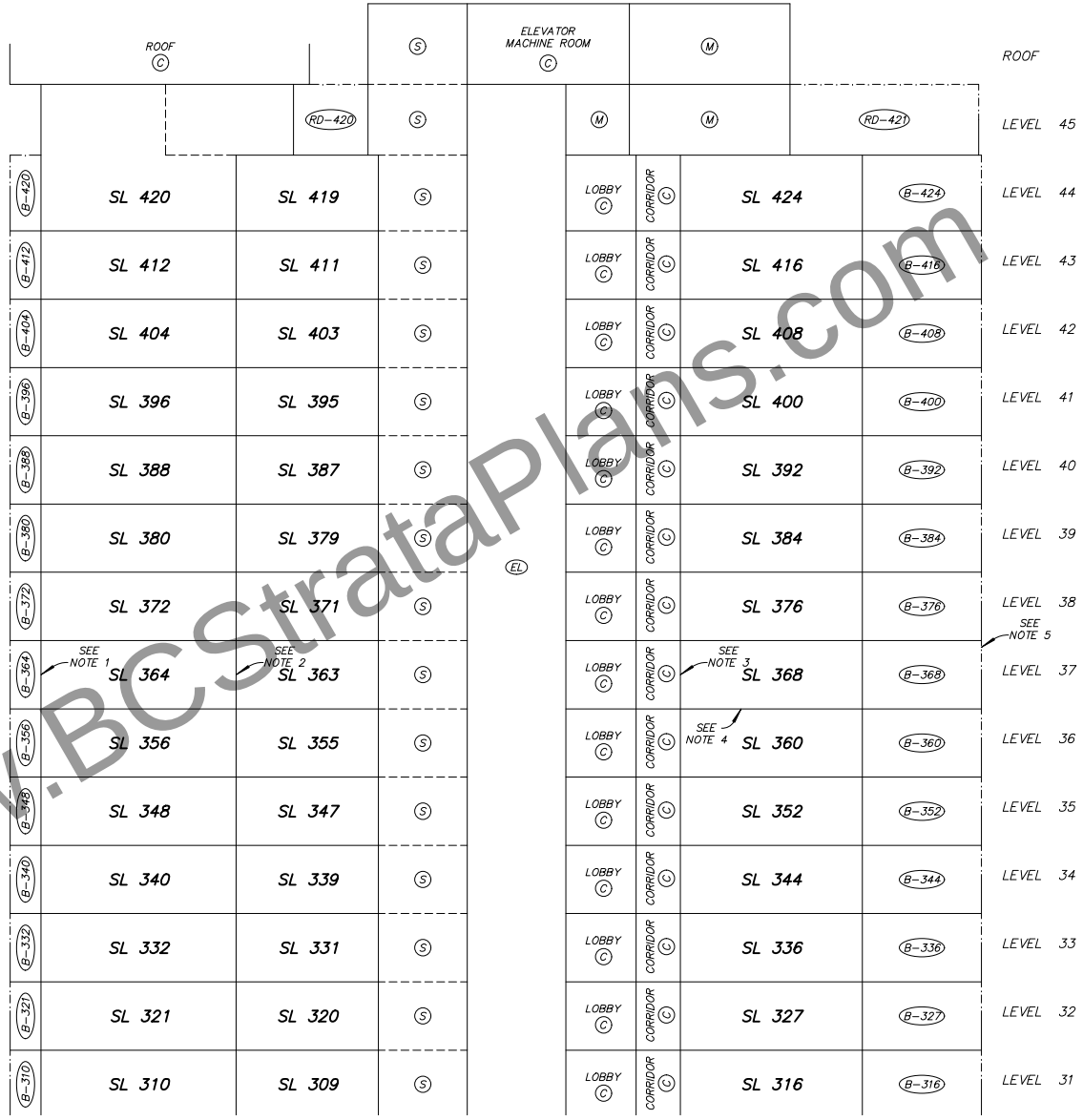

SEE SHEET 129 FOR CONTINUATION

NOTES:

1. STRATA LOT BOUNDARY EXTERIOR FACE OF EXTERIOR WALLS (TYPICAL)
2. STRATA LOT BOUNDARY CENTRELINE OF DEMISING WALLS BETWEEN STRATA LOTS (TYPICAL)
3. STRATA LOT BOUNDARY EXTERIOR FACE OF WALLS ADJACENT TO COMMON AREAS (TYPICAL)
4. STRATA LOT BOUNDARY CENTRELINE FLOOR/CEILING (TYPICAL)
5. UPPER LIMIT OF LCP IS EXTENSION OF THE CENTRELINE OF THE FLOOR/CEILING ABOVE OR WHERE THERE IS NO FLOOR ABOVE, BY THE AVERAGE HEIGHT OF A STRATA LOT WITHIN THE SAME BUILDING (TYPICAL)

LEGEND

m²	DENOTES SQUARE METRES
SL	DENOTES STRATA LOT
PT	DENOTES PART
T	DENOTES TOTAL
Ex.	DENOTES EXPLANATORY
(C)	DENOTES COMMON PROPERTY
(E)	DENOTES ELECTRICAL ROOM BEING COMMON PROPERTY
(M)	DENOTES MECHANICAL ROOM BEING COMMON PROPERTY
(V)	DENOTES VESTIBULE BEING COMMON PROPERTY
(D)	DENOTES DUCT BEING COMMON PROPERTY
(S)	DENOTES STAIRS BEING COMMON PROPERTY
(EL)	DENOTES ELEVATOR BEING COMMON PROPERTY
(B–1)	DENOTES BALCONY BEING LIMITED COMMON PROPERTY FOR THE EXCLUSIVE USE OF STRATA LOT 1 (TYPICAL)
(RD–420)	DENOTES ROOF DECK BEING LIMITED COMMON PROPERTY FOR THE EXCLUSIVE USE OF STRATA LOT 420 (TYPICAL)

LCP AREAS ARE DEFINED AS TO HEIGHT BY THE CENTRE OF THE FLOOR ABOVE OR ITS EXTENSION OR WHERE THERE IS NO FLOOR ABOVE, BY THE AVERAGE HEIGHT OF A STRATA LOT WITHIN THE SAME BUILDING, UNLESS OTHERWISE NOTED

SECTION ARROWS POINT IN THE DIRECTION OF VIEW

www.BCStrataPlans.com

BUTLER SUNDVICK
JESSE MORIN, BCLS
Date: SEPTEMBER 16, 2022
File: 4772\Strata\Final
Dwg: 4772–FS

STRATA PLAN EPS8443

TOWER 2
CROSS SECTION B–B'

0 5 10 15

SCALE 1 : 150 DISTANCES ARE IN METRES

THE INTENDED PLOT SCALE OF THIS PLAN IS 560 mm IN WIDTH BY 432 mm IN HEIGHT (C SIZE) WHEN PLOTTED AT A SCALE OF 1:150.

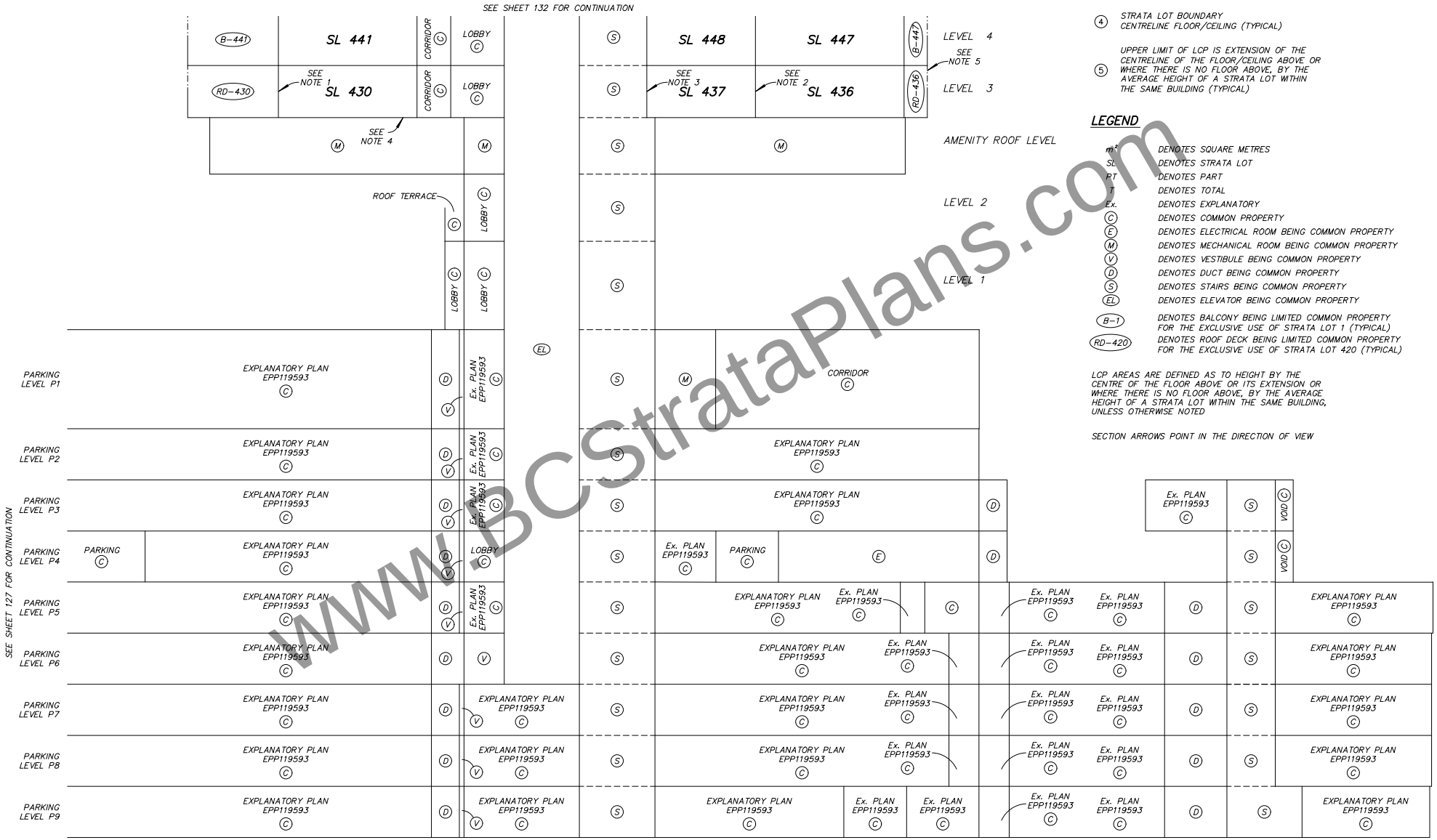

NOTES:

1. STRATA LOT BOUNDARY EXTERIOR FACE OF EXTERIOR WALLS (TYPICAL)
2. STRATA LOT BOUNDARY CENTRELINE OF DEMISING WALLS BETWEEN STRATA LOTS (TYPICAL)
3. STRATA LOT BOUNDARY EXTERIOR FACE OF WALLS ADJACENT TO COMMON AREAS (TYPICAL)
4. STRATA LOT BOUNDARY CENTRELINE FLOOR/CEILING (TYPICAL)
5. UPPER LIMIT OF LCP IS EXTENSION OF THE CENTRELINE OF THE FLOOR/CEILING ABOVE OR WHERE THERE IS NO FLOOR ABOVE, BY THE AVERAGE HEIGHT OF A STRATA LOT WITHIN THE SAME BUILDING (TYPICAL)

LEGEND

m^2	DENOTES SQUARE METRES
SL	DENOTES STRATA LOT
PT	DENOTES PART
T	DENOTES TOTAL
Ex.	DENOTES EXPLANATORY
(C)	DENOTES COMMON PROPERTY
(E)	DENOTES ELECTRICAL ROOM BEING COMMON PROPERTY
(M)	DENOTES MECHANICAL ROOM BEING COMMON PROPERTY
(V)	DENOTES VESTIBULE BEING COMMON PROPERTY
(D)	DENOTES DUCT BEING COMMON PROPERTY
(S)	DENOTES STAIRS BEING COMMON PROPERTY
(EL)	DENOTES ELEVATOR BEING COMMON PROPERTY
(B–1)	DENOTES BALCONY BEING LIMITED COMMON PROPERTY FOR THE EXCLUSIVE USE OF STRATA LOT 1 (TYPICAL)
(RD–420)	DENOTES ROOF DECK BEING LIMITED COMMON PROPERTY FOR THE EXCLUSIVE USE OF STRATA LOT 420 (TYPICAL)

LCP AREAS ARE DEFINED AS TO HEIGHT BY THE CENTRE OF THE FLOOR ABOVE OR ITS EXTENSION OR WHERE THERE IS NO FLOOR ABOVE, BY THE AVERAGE HEIGHT OF A STRATA LOT WITHIN THE SAME BUILDING, UNLESS OTHERWISE NOTED

SECTION ARROWS POINT IN THE DIRECTION OF VIEW

www.BCStrataPlans.com

BUTLER SUNDVICK

JESSE MORIN, BCLS
Date: SEPTEMBER 16, 2022
File: 4772\Strata\Final
Dwg: 4772–FS

TOWER 2
CROSS SECTION B–B'

0 5 10 15

SCALE 1 : 150 DISTANCES ARE IN METRES

THE INTENDED PLOT SCALE OF THIS PLAN IS 560 mm IN WIDTH BY 432 mm IN HEIGHT (C SIZE) WHEN PLOTTED AT A SCALE OF 1:150.

SEE SHEET 133 FOR CONTINUATION

B–617	SL 617	CORRIDOR C	LOBBY C		S	SL 624	SL 623	B–623	LEVEL 20
B–606	SL 606	CORRIDOR C	LOBBY C		S	SL 613	SL 612	B–612	LEVEL 19
B–595	SL 595	CORRIDOR C	LOBBY C		S	SL 602	SL 601	B–601	LEVEL 18
B–584	SL 584	CORRIDOR C	LOBBY C		S	SL 591	SL 590	B–590	LEVEL 17
B–573	SL 573	CORRIDOR C	LOBBY C		S	SL 580	SL 579	B–579	LEVEL 16
B–562	SL 562	CORRIDOR C	LOBBY C		S	SL 569	SL 568	B–568	LEVEL 15
B–551	SL 551	CORRIDOR C	LOBBY C		S	SL 558	SL 557	B–557	LEVEL 14
B–540	SL 540	CORRIDOR C	LOBBY C		S	SL 547	SL 546	B–546	LEVEL 13
B–529	SEE NOTE 1 SL 529	CORRIDOR C	LOBBY C		S	SEE NOTE 3 SL 536	SEE NOTE 2 SL 535	B–535 SEE NOTE 5	LEVEL 12
B–518	SL 518 SEE NOTE 4	CORRIDOR C	LOBBY C	EL	S	SL 525	SL 524	B–524	LEVEL 11
B–507	SL 507	CORRIDOR C	LOBBY C		S	SL 514	SL 513	B–513	LEVEL 10
B–496	SL 496	CORRIDOR C	LOBBY C		S	SL 503	SL 502	B–502	LEVEL 9
B–485	SL 485	CORRIDOR C	LOBBY C		S	SL 492	SL 491	B–491	LEVEL 8
B–474	SL 474	CORRIDOR C	LOBBY C		S	SL 481	SL 480	B–480	LEVEL 7
B–463	SL 463	CORRIDOR C	LOBBY C		S	SL 470	SL 469	B–469	LEVEL 6
B–452	SL 452	CORRIDOR C	LOBBY C		S	SL 459	SL 458	B–458	LEVEL 5
B–441	SL 441	CORRIDOR C	LOBBY C		S	SL 448	SL 447	B–447	LEVEL 4
RD–430	SL 430	CORRIDOR C	LOBBY C		S	SL 437	SL 436	RD–436	LEVEL 3

SEE SHEET 131 FOR CONTINUATION

NOTES:

1. STRATA LOT BOUNDARY EXTERIOR FACE OF EXTERIOR WALLS (TYPICAL)
2. STRATA LOT BOUNDARY CENTRELINE OF DEMISING WALLS BETWEEN STRATA LOTS (TYPICAL)
3. STRATA LOT BOUNDARY EXTERIOR FACE OF WALLS ADJACENT TO COMMON AREAS (TYPICAL)
4. STRATA LOT BOUNDARY CENTRELINE FLOOR/CEILING (TYPICAL)
5. UPPER LIMIT OF LCP IS EXTENSION OF THE CENTRELINE OF THE FLOOR/CEILING ABOVE OR WHERE THERE IS NO FLOOR ABOVE, BY THE AVERAGE HEIGHT OF A STRATA LOT WITHIN THE SAME BUILDING (TYPICAL)

LEGEND

m²	DENOTES SQUARE METRES
SL	DENOTES STRATA LOT
PT	DENOTES PART
T	DENOTES TOTAL
Ex.	DENOTES EXPLANATORY
C	DENOTES COMMON PROPERTY
E	DENOTES ELECTRICAL ROOM BEING COMMON PROPERTY
M	DENOTES MECHANICAL ROOM BEING COMMON PROPERTY
V	DENOTES VESTIBULE BEING COMMON PROPERTY
D	DENOTES DUCT BEING COMMON PROPERTY
S	DENOTES STAIRS BEING COMMON PROPERTY
EL	DENOTES ELEVATOR BEING COMMON PROPERTY
B–1	DENOTES BALCONY BEING LIMITED COMMON PROPERTY FOR THE EXCLUSIVE USE OF STRATA LOT 1 (TYPICAL)
RD–420	DENOTES ROOF DECK BEING LIMITED COMMON PROPERTY FOR THE EXCLUSIVE USE OF STRATA LOT 420 (TYPICAL)

LCP AREAS ARE DEFINED AS TO HEIGHT BY THE CENTRE OF THE FLOOR ABOVE OR ITS EXTENSION OR WHERE THERE IS NO FLOOR ABOVE, BY THE AVERAGE HEIGHT OF A STRATA LOT WITHIN THE SAME BUILDING, UNLESS OTHERWISE NOTED

SECTION ARROWS POINT IN THE DIRECTION OF VIEW

www.BCStrataPlans.com

BUTLER SUNDVICK
JESSE MORIN, BCLS
Date: SEPTEMBER 16, 2022
File: 4772\Strata\Final
Dwg: 4772–FS

TOWER 2
CROSS SECTION B–B'

0 5 10 15

SCALE 1 : 150 DISTANCES ARE IN METRES

THE INTENDED PLOT SCALE OF THIS PLAN IS 560 mm IN WIDTH BY 432 mm IN HEIGHT (C SIZE) WHEN PLOTTED AT A SCALE OF 1:150.

SEE SHEET 134 FOR CONTINUATION

B–783	SL 783	CORRIDOR (C)	LOBBY (C)		(S)	SL 788	SL 787	B–787	LEVEL 36
B–775	SL 775	CORRIDOR (C)	LOBBY (C)		(S)	SL 780	SL 779	B–779	LEVEL 35
B–767	SL 767	CORRIDOR (C)	LOBBY (C)		(S)	SL 772	SL 771	B–771	LEVEL 34
B–759	SL 759	CORRIDOR (C)	LOBBY (C)		(S)	SL 764	SL 763	B–763	LEVEL 33
B–749	SL 749	CORRIDOR (C)	LOBBY (C)		(S)	SL 756	SL 755	B–755	LEVEL 32
B–738	SL 738	CORRIDOR (C)	LOBBY (C)		(S)	SL 745	SL 744	B–744	LEVEL 31
B–727	SL 727	CORRIDOR (C)	LOBBY (C)		(S)	SL 734	SL 733	B–733	LEVEL 30
B–716	SL 716	CORRIDOR (C)	LOBBY (C)		(S)	SL 723	SL 722	B–722	LEVEL 29
B–705	SEE NOTE 1 SL 705	CORRIDOR (C)	LOBBY (C)		(S)	SEE NOTE 3 SL 712	SEE NOTE 2 SL 711	B–711	SEE NOTE 5 LEVEL 28
B–694	SL 694 SEE NOTE 4	CORRIDOR (C)	LOBBY (C)	(EL)	(S)	SL 701	SL 700	B–700	LEVEL 27
B–683	SL 683	CORRIDOR (C)	LOBBY (C)		(S)	SL 690	SL 689	B–689	LEVEL 26
B–672	SL 672	CORRIDOR (C)	LOBBY (C)		(S)	SL 679	SL 678	B–678	LEVEL 25
B–661	SL 661	CORRIDOR (C)	LOBBY (C)		(S)	SL 668	SL 667	B–667	LEVEL 24
B–650	SL 650	CORRIDOR (C)	LOBBY (C)		(S)	SL 657	SL 656	B–656	LEVEL 23
B–639	SL 639	CORRIDOR (C)	LOBBY (C)		(S)	SL 646	SL 645	B–645	LEVEL 22
B–628	SL 628	CORRIDOR (C)	LOBBY (C)		(S)	SL 635	SL 634	B–634	LEVEL 21
B–617	SL 617	CORRIDOR (C)	LOBBY (C)		(S)	SL 624	SL 623	B–623	LEVEL 20
B–606	SL 606	CORRIDOR (C)	LOBBY (C)		(S)	SL 613	SL 612	B–612	LEVEL 19

SEE SHEET 132 FOR CONTINUATION

NOTES:

1. STRATA LOT BOUNDARY EXTERIOR FACE OF EXTERIOR WALLS (TYPICAL)
2. STRATA LOT BOUNDARY CENTRELINE OF DEMISING WALLS BETWEEN STRATA LOTS (TYPICAL)
3. STRATA LOT BOUNDARY EXTERIOR FACE OF WALLS ADJACENT TO COMMON AREAS (TYPICAL)
4. STRATA LOT BOUNDARY CENTRELINE FLOOR/CEILING (TYPICAL)
5. UPPER LIMIT OF LCP IS EXTENSION OF THE CENTRELINE OF THE FLOOR/CEILING ABOVE OR WHERE THERE IS NO FLOOR ABOVE, BY THE AVERAGE HEIGHT OF A STRATA LOT WITHIN THE SAME BUILDING (TYPICAL)

LEGEND

m²	DENOTES SQUARE METRES
SL	DENOTES STRATA LOT
PT	DENOTES PART
T	DENOTES TOTAL
Ex.	DENOTES EXPLANATORY
(C)	DENOTES COMMON PROPERTY
(E)	DENOTES ELECTRICAL ROOM BEING COMMON PROPERTY
(M)	DENOTES MECHANICAL ROOM BEING COMMON PROPERTY
(V)	DENOTES VESTIBULE BEING COMMON PROPERTY
(D)	DENOTES DUCT BEING COMMON PROPERTY
(S)	DENOTES STAIRS BEING COMMON PROPERTY
(EL)	DENOTES ELEVATOR BEING COMMON PROPERTY
(B–1)	DENOTES BALCONY BEING LIMITED COMMON PROPERTY FOR THE EXCLUSIVE USE OF STRATA LOT 1 (TYPICAL)
(RD–420)	DENOTES ROOF DECK BEING LIMITED COMMON PROPERTY FOR THE EXCLUSIVE USE OF STRATA LOT 420 (TYPICAL)

LCP AREAS ARE DEFINED AS TO HEIGHT BY THE CENTRE OF THE FLOOR ABOVE OR ITS EXTENSION OR WHERE THERE IS NO FLOOR ABOVE, BY THE AVERAGE HEIGHT OF A STRATA LOT WITHIN THE SAME BUILDING, UNLESS OTHERWISE NOTED

SECTION ARROWS POINT IN THE DIRECTION OF VIEW

www.BCStrataPlans.com

BUTLER SUNDVICK
JESSE MORIN, BCLS
Date: SEPTEMBER 16, 2022
File: 4772\Strata\Final
Dwg: 4772–FS

TOWER 2
CROSS SECTION B–B'

0 5 10 15

SCALE 1 : 150 DISTANCES ARE IN METRES

THE INTENDED PLOT SCALE OF THIS PLAN IS 560 mm IN WIDTH BY 432 mm IN HEIGHT (C SIZE) WHEN PLOTTED AT A SCALE OF 1:150.

SEE SHEET 133 FOR CONTINUATION

NOTES:

1. STRATA LOT BOUNDARY EXTERIOR FACE OF EXTERIOR WALLS (TYPICAL)
2. STRATA LOT BOUNDARY CENTRELINE OF DEMISING WALLS BETWEEN STRATA LOTS (TYPICAL)
3. STRATA LOT BOUNDARY EXTERIOR FACE OF WALLS ADJACENT TO COMMON AREAS (TYPICAL)
4. STRATA LOT BOUNDARY CENTRELINE FLOOR/CEILING (TYPICAL)
5. UPPER LIMIT OF LCP IS EXTENSION OF THE CENTRELINE OF THE FLOOR/CEILING ABOVE OR WHERE THERE IS NO FLOOR ABOVE, BY THE AVERAGE HEIGHT OF A STRATA LOT WITHIN THE SAME BUILDING (TYPICAL)

LEGEND

m²	DENOTES SQUARE METRES
SL	DENOTES STRATA LOT
PT	DENOTES PART
T	DENOTES TOTAL
Ex.	DENOTES EXPLANATORY
C	DENOTES COMMON PROPERTY
E	DENOTES ELECTRICAL ROOM BEING COMMON PROPERTY
M	DENOTES MECHANICAL ROOM BEING COMMON PROPERTY
V	DENOTES VESTIBULE BEING COMMON PROPERTY
D	DENOTES DUCT BEING COMMON PROPERTY
S	DENOTES STAIRS BEING COMMON PROPERTY
EL	DENOTES ELEVATOR BEING COMMON PROPERTY
B–1	DENOTES BALCONY BEING LIMITED COMMON PROPERTY FOR THE EXCLUSIVE USE OF STRATA LOT 1 (TYPICAL)
RD–420	DENOTES ROOF DECK BEING LIMITED COMMON PROPERTY FOR THE EXCLUSIVE USE OF STRATA LOT 420 (TYPICAL)

LCP AREAS ARE DEFINED AS TO HEIGHT BY THE CENTRE OF THE FLOOR ABOVE OR ITS EXTENSION OR WHERE THERE IS NO FLOOR ABOVE, BY THE AVERAGE HEIGHT OF A STRATA LOT WITHIN THE SAME BUILDING, UNLESS OTHERWISE NOTED

SECTION ARROWS POINT IN THE DIRECTION OF VIEW

www.BCStrataPlans.com

BUTLER SUNDVICK

JESSE MORIN, BCLS
Date: SEPTEMBER 16, 2022
File: 4772\Strata\Final
Dwg: 4772–FS

STRATA PLAN EPS8443

TOWER 2
CROSS SECTION C–C'

0 5 10 15

SCALE 1 : 150 DISTANCES ARE IN METRES

THE INTENDED PLOT SCALE OF THIS PLAN IS 560 mm IN WIDTH BY 432 mm IN HEIGHT (C SIZE) WHEN PLOTTED AT A SCALE OF 1:150.

SEE SHEET 136 FOR CONTINUATION

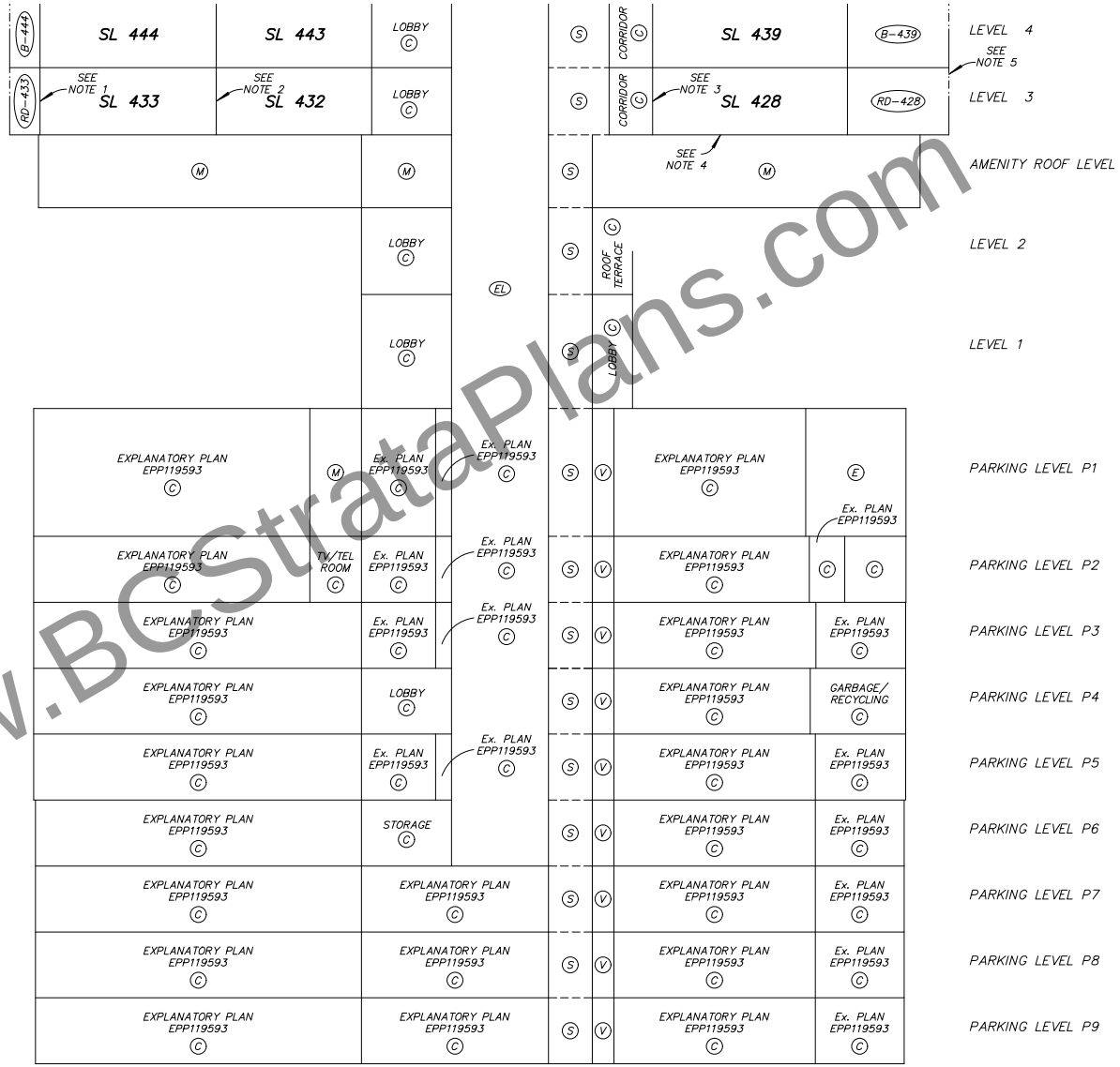

NOTES:

1. STRATA LOT BOUNDARY EXTERIOR FACE OF EXTERIOR WALLS (TYPICAL)
2. STRATA LOT BOUNDARY CENTRELINE OF DEMISING WALLS BETWEEN STRATA LOTS (TYPICAL)
3. STRATA LOT BOUNDARY EXTERIOR FACE OF WALLS ADJACENT TO COMMON AREAS (TYPICAL)
4. STRATA LOT BOUNDARY CENTRELINE FLOOR/CEILING (TYPICAL)
5. UPPER LIMIT OF LCP IS EXTENSION OF THE CENTRELINE OF THE FLOOR/CEILING ABOVE OR WHERE THERE IS NO FLOOR ABOVE, BY THE AVERAGE HEIGHT OF A STRATA LOT WITHIN THE SAME BUILDING (TYPICAL)

LEGEND

m²	DENOTES SQUARE METRES
SL	DENOTES STRATA LOT
PT	DENOTES PART
T	DENOTES TOTAL
Ex.	DENOTES EXPLANATORY
C	DENOTES COMMON PROPERTY
E	DENOTES ELECTRICAL ROOM BEING COMMON PROPERTY
M	DENOTES MECHANICAL ROOM BEING COMMON PROPERTY
V	DENOTES VESTIBULE BEING COMMON PROPERTY
D	DENOTES DUCT BEING COMMON PROPERTY
S	DENOTES STAIRS BEING COMMON PROPERTY
EL	DENOTES ELEVATOR BEING COMMON PROPERTY
B–1	DENOTES BALCONY BEING LIMITED COMMON PROPERTY FOR THE EXCLUSIVE USE OF STRATA LOT 1 (TYPICAL)
RD–420	DENOTES ROOF DECK BEING LIMITED COMMON PROPERTY FOR THE EXCLUSIVE USE OF STRATA LOT 420 (TYPICAL)

LCP AREAS ARE DEFINED AS TO HEIGHT BY THE CENTRE OF THE FLOOR ABOVE OR ITS EXTENSION OR WHERE THERE IS NO FLOOR ABOVE, BY THE AVERAGE HEIGHT OF A STRATA LOT WITHIN THE SAME BUILDING, UNLESS OTHERWISE NOTED

SECTION ARROWS POINT IN THE DIRECTION OF VIEW

www.BCStrataPlans.com

BUTLER SUNDVICK
JESSE MORIN, BCLS
Date: SEPTEMBER 16, 2022
File: 4772\Strata\Final
Dwg: 4772–FS

TOWER 2
CROSS SECTION C–C'

0 5 10 15

SCALE 1 : 150 DISTANCES ARE IN METRES

THE INTENDED PLOT SCALE OF THIS PLAN IS 560 mm IN WIDTH BY 432 mm IN HEIGHT (C SIZE) WHEN PLOTTED AT A SCALE OF 1:150.

SEE SHEET 137 FOR CONTINUATION

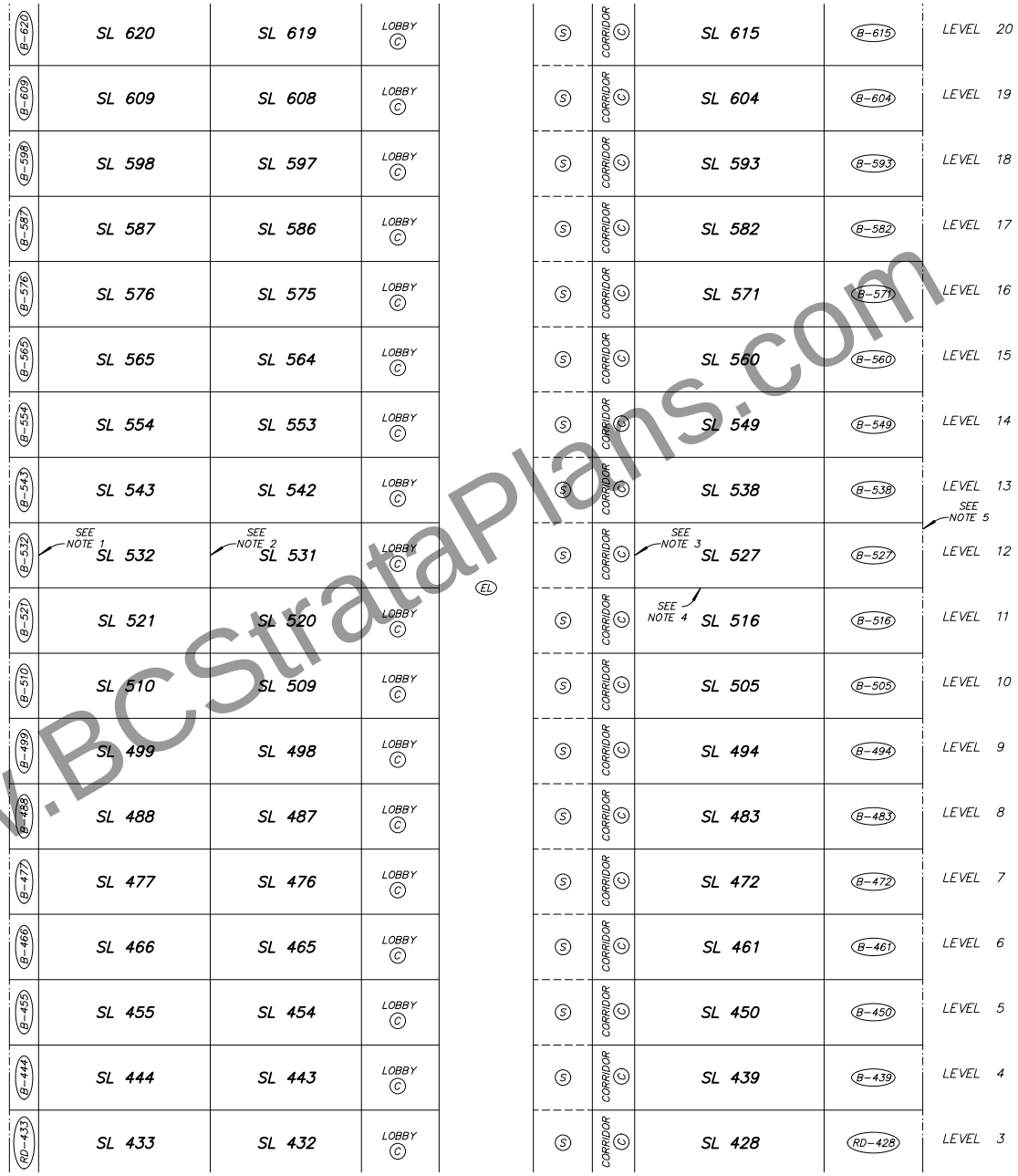

SEE SHEET 135 FOR CONTINUATION

NOTES:

1. STRATA LOT BOUNDARY EXTERIOR FACE OF EXTERIOR WALLS (TYPICAL)
2. STRATA LOT BOUNDARY CENTRELINE OF DEMISING WALLS BETWEEN STRATA LOTS (TYPICAL)
3. STRATA LOT BOUNDARY EXTERIOR FACE OF WALLS ADJACENT TO COMMON AREAS (TYPICAL)
4. STRATA LOT BOUNDARY CENTRELINE FLOOR/CEILING (TYPICAL)
5. UPPER LIMIT OF LCP IS EXTENSION OF THE CENTRELINE OF THE FLOOR/CEILING ABOVE OR WHERE THERE IS NO FLOOR ABOVE, BY THE AVERAGE HEIGHT OF A STRATA LOT WITHIN THE SAME BUILDING (TYPICAL)

LEGEND

m²	DENOTES SQUARE METRES
SL	DENOTES STRATA LOT
PT	DENOTES PART
T	DENOTES TOTAL
Ex.	DENOTES EXPLANATORY
(C)	DENOTES COMMON PROPERTY
(E)	DENOTES ELECTRICAL ROOM BEING COMMON PROPERTY
(M)	DENOTES MECHANICAL ROOM BEING COMMON PROPERTY
(V)	DENOTES VESTIBULE BEING COMMON PROPERTY
(D)	DENOTES DUCT BEING COMMON PROPERTY
(S)	DENOTES STAIRS BEING COMMON PROPERTY
(EL)	DENOTES ELEVATOR BEING COMMON PROPERTY
(B–1)	DENOTES BALCONY BEING LIMITED COMMON PROPERTY FOR THE EXCLUSIVE USE OF STRATA LOT 1 (TYPICAL)
(RD–420)	DENOTES ROOF DECK BEING LIMITED COMMON PROPERTY FOR THE EXCLUSIVE USE OF STRATA LOT 420 (TYPICAL)

LCP AREAS ARE DEFINED AS TO HEIGHT BY THE CENTRE OF THE FLOOR ABOVE OR ITS EXTENSION OR WHERE THERE IS NO FLOOR ABOVE, BY THE AVERAGE HEIGHT OF A STRATA LOT WITHIN THE SAME BUILDING, UNLESS OTHERWISE NOTED

SECTION ARROWS POINT IN THE DIRECTION OF VIEW

www.BCStrataPlans.com

BUTLER SUNDVICK

JESSE MORIN, BCLS
Date: SEPTEMBER 16, 2022
File: 4772\Strata\Final
Dwg: 4772–FS

TOWER 2
CROSS SECTION C–C'

0 5 10 15

SCALE 1 : 150 DISTANCES ARE IN METRES

THE INTENDED PLOT SCALE OF THIS PLAN IS 560 mm IN WIDTH BY 432 mm IN HEIGHT (C SIZE) WHEN PLOTTED AT A SCALE OF 1:150.

SEE SHEET 138 FOR CONTINUATION

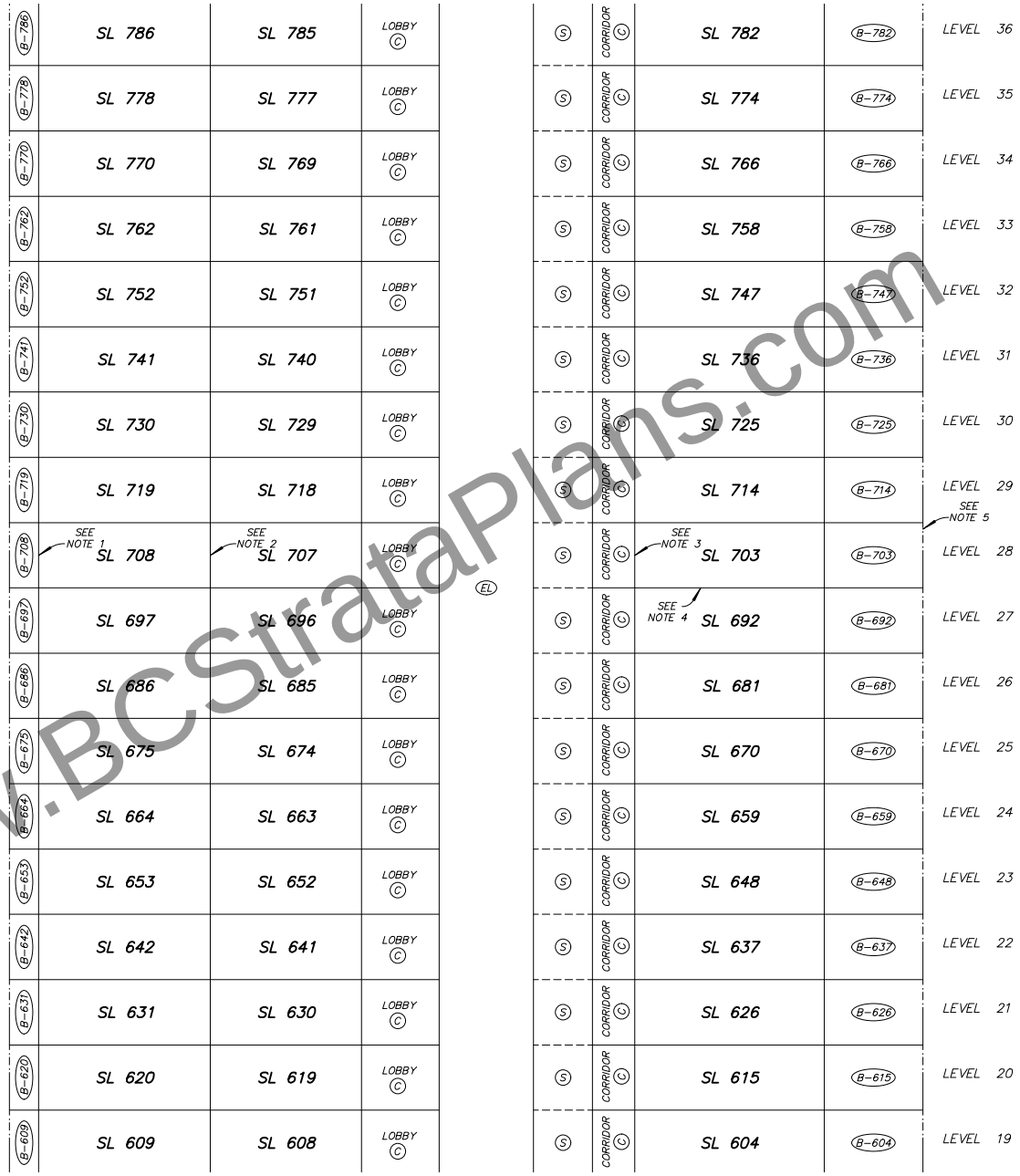

SEE SHEET 136 FOR CONTINUATION

NOTES:

1. STRATA LOT BOUNDARY EXTERIOR FACE OF EXTERIOR WALLS (TYPICAL)
2. STRATA LOT BOUNDARY CENTRELINE OF DEMISING WALLS BETWEEN STRATA LOTS (TYPICAL)
3. STRATA LOT BOUNDARY EXTERIOR FACE OF WALLS ADJACENT TO COMMON AREAS (TYPICAL)
4. STRATA LOT BOUNDARY CENTRELINE FLOOR/CEILING (TYPICAL)
5. UPPER LIMIT OF LCP IS EXTENSION OF THE CENTRELINE OF THE FLOOR/CEILING ABOVE OR WHERE THERE IS NO FLOOR ABOVE, BY THE AVERAGE HEIGHT OF A STRATA LOT WITHIN THE SAME BUILDING (TYPICAL)

LEGEND

m²	DENOTES SQUARE METRES
SL	DENOTES STRATA LOT
PT	DENOTES PART
T	DENOTES TOTAL
Ex.	DENOTES EXPLANATORY
C	DENOTES COMMON PROPERTY
E	DENOTES ELECTRICAL ROOM BEING COMMON PROPERTY
M	DENOTES MECHANICAL ROOM BEING COMMON PROPERTY
V	DENOTES VESTIBULE BEING COMMON PROPERTY
D	DENOTES DUCT BEING COMMON PROPERTY
S	DENOTES STAIRS BEING COMMON PROPERTY
EL	DENOTES ELEVATOR BEING COMMON PROPERTY
B–1	DENOTES BALCONY BEING LIMITED COMMON PROPERTY FOR THE EXCLUSIVE USE OF STRATA LOT 1 (TYPICAL)
RD–420	DENOTES ROOF DECK BEING LIMITED COMMON PROPERTY FOR THE EXCLUSIVE USE OF STRATA LOT 420 (TYPICAL)

LCP AREAS ARE DEFINED AS TO HEIGHT BY THE CENTRE OF THE FLOOR ABOVE OR ITS EXTENSION OR WHERE THERE IS NO FLOOR ABOVE, BY THE AVERAGE HEIGHT OF A STRATA LOT WITHIN THE SAME BUILDING, UNLESS OTHERWISE NOTED

SECTION ARROWS POINT IN THE DIRECTION OF VIEW

www.BCStrataPlans.com

BUTLER SUNDVICK

JESSE MORIN, BCLS
Date: SEPTEMBER 16, 2022
File: 4772\Strata\Final
Dwg: 4772–FS

STRATA PLAN EPS8443

TOWER 2
CROSS SECTION C–C'

0 5 10 15

SCALE 1 : 150 DISTANCES ARE IN METRES

THE INTENDED PLOT SCALE OF THIS PLAN IS 560 mm IN WIDTH BY 432 mm IN HEIGHT (C SIZE) WHEN PLOTTED AT A SCALE OF 1:150.

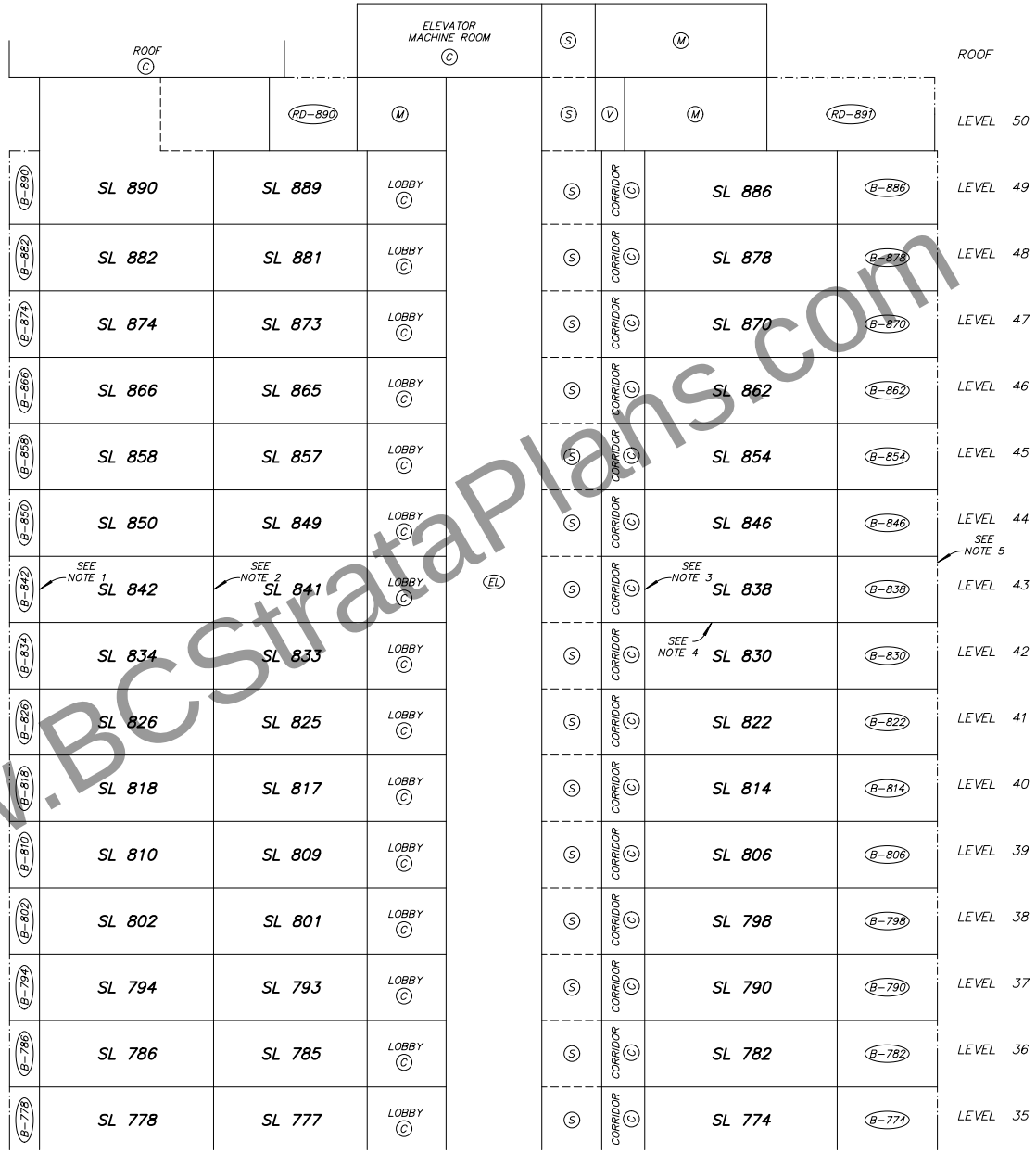

SEE SHEET 137 FOR CONTINUATION

NOTES:

1. STRATA LOT BOUNDARY EXTERIOR FACE OF EXTERIOR WALLS (TYPICAL)
2. STRATA LOT BOUNDARY CENTRELINE OF DEMISING WALLS BETWEEN STRATA LOTS (TYPICAL)
3. STRATA LOT BOUNDARY EXTERIOR FACE OF WALLS ADJACENT TO COMMON AREAS (TYPICAL)
4. STRATA LOT BOUNDARY CENTRELINE FLOOR/CEILING (TYPICAL)
5. UPPER LIMIT OF LCP IS EXTENSION OF THE CENTRELINE OF THE FLOOR/CEILING ABOVE OR WHERE THERE IS NO FLOOR ABOVE, BY THE AVERAGE HEIGHT OF A STRATA LOT WITHIN THE SAME BUILDING (TYPICAL)

LEGEND

m^2	DENOTES SQUARE METRES
SL	DENOTES STRATA LOT
PT	DENOTES PART
T	DENOTES TOTAL
Ex.	DENOTES EXPLANATORY
(C)	DENOTES COMMON PROPERTY
(E)	DENOTES ELECTRICAL ROOM BEING COMMON PROPERTY
(M)	DENOTES MECHANICAL ROOM BEING COMMON PROPERTY
(V)	DENOTES VESTIBULE BEING COMMON PROPERTY
(D)	DENOTES DUCT BEING COMMON PROPERTY
(S)	DENOTES STAIRS BEING COMMON PROPERTY
(EL)	DENOTES ELEVATOR BEING COMMON PROPERTY
(B–1)	DENOTES BALCONY BEING LIMITED COMMON PROPERTY FOR THE EXCLUSIVE USE OF STRATA LOT 1 (TYPICAL)
(RD–420)	DENOTES ROOF DECK BEING LIMITED COMMON PROPERTY FOR THE EXCLUSIVE USE OF STRATA LOT 420 (TYPICAL)

LCP AREAS ARE DEFINED AS TO HEIGHT BY THE CENTRE OF THE FLOOR ABOVE OR ITS EXTENSION OR WHERE THERE IS NO FLOOR ABOVE, BY THE AVERAGE HEIGHT OF A STRATA LOT WITHIN THE SAME BUILDING, UNLESS OTHERWISE NOTED

SECTION ARROWS POINT IN THE DIRECTION OF VIEW

www.BCStrataPlans.com

BUTLER SUNDVICK

JESSE MORIN, BCLS
Date: SEPTEMBER 16, 2022
File: 4772\Strata\Final
Dwg: 4772–FS