Mun. of Surrey

PHASED STRATA PLAN OF LOT 1 OF SECTION 19, TOWNSHIP 2, PLAN 86355,

NEW WESTMINSTER DISTRICT

INTEGRATED SURVEY AREA No. 1
MUNICIPALITY OF SURREY, B.C.
SCALE 1: 1000 (ALL DISTANCES ARE IN METRES)

0 10 20 40 60 80

LEGEND: GRID BEARINGS ARE DERIVED FROM PLAN 81970.
THIS PLAN SHOWS GROUND-LEVEL MEASURED DISTANCES.
PRIOR TO COMPUTATION OF U.T.M. CO-ORDINATES, MULTIPLY BY COMBINED FACTOR 0.9995970

© DENOTES COMMON PROPERTY.
CIVIC ADDRESSES ARE SHOWN ON SHEETS 5 TO 11, INCL.

PHASE 2 FIRST SHEET, 1 OF 15 SHEETS

STRATA PLAN N.W. 3130

DEPOSITED AND REGISTERED
IN THE LAND TITLE OFFICE
AT NEW WESTMINSTER B.C.
THIS 18 DAY OF May, 1990

E. J. Rauer
REGISTRAR
Ref: AD133272 to AD1332984

THE ADDRESS FOR SERVICE OF DOCUMENTS
ON THE STRATA CORPORATION IS:
THE OWNERS,
STRATA PLAN N.W. 3130
7837-120A STREET
SURREY, B.C.
V3W-3P1

Form E filed AC326645
Amended Form E filed
AD192384

P.50

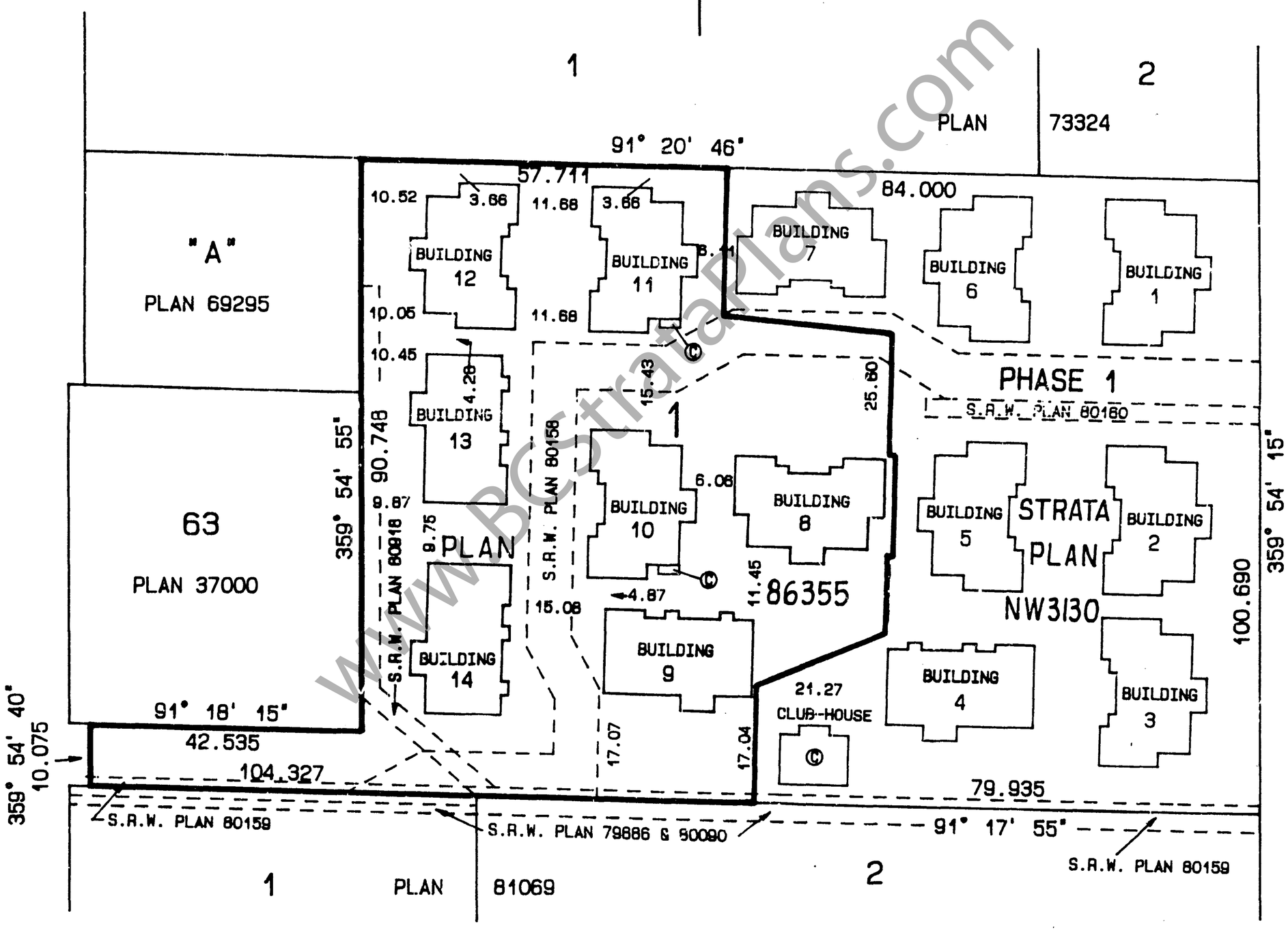

APPROVED AS PHASE 2 OF A TWO PHASE STRATA PLAN
UNDER THE CONDOMINIUM ACT, THIS 9th DAY OF May, 1990

Lee Jan
APPROVING OFFICER
MUNICIPALITY OF SURREY

THIS PLAN LIES WITHIN THE GREATER VANCOUVER REGIONAL DISTRICT

Isaak, Osman & Associates
B.C. LAND SURVEYORS
20609 LOGAN AVENUE
LANGLEY B.C. V3A-7R3
TEL [604] 533-2411
FAX [604] 534-7241

FILE: 11796S30

I, A.M. OSMAN, A BRITISH COLUMBIA LAND SURVEYOR OF LANGLEY, B.C., HEREBY CERTIFY THAT THE 7 BUILDINGS ERECTED ON THE PARCEL DESCRIBED ABOVE ARE WHOLLY WITHIN THE BOUNDARIES OF THAT PARCEL.

B.C.L.S.

DATED AT LANGLEY B.C., THIS 17th DAY OF APRIL, 1990

www.BCstrataplans.com

FOUNDATION PERIMETER OF BUILDINGS 8, 9, 10 AND 14

FIRST SHEET, 2 OF 15 SHEETS

STRATA PLAN N.W. 3130

PHASE 2

SCALE 1: 250 (ALL DISTANCES ARE IN METRES)

0 5 10 20

© DENOTES COMMON PROPERTY

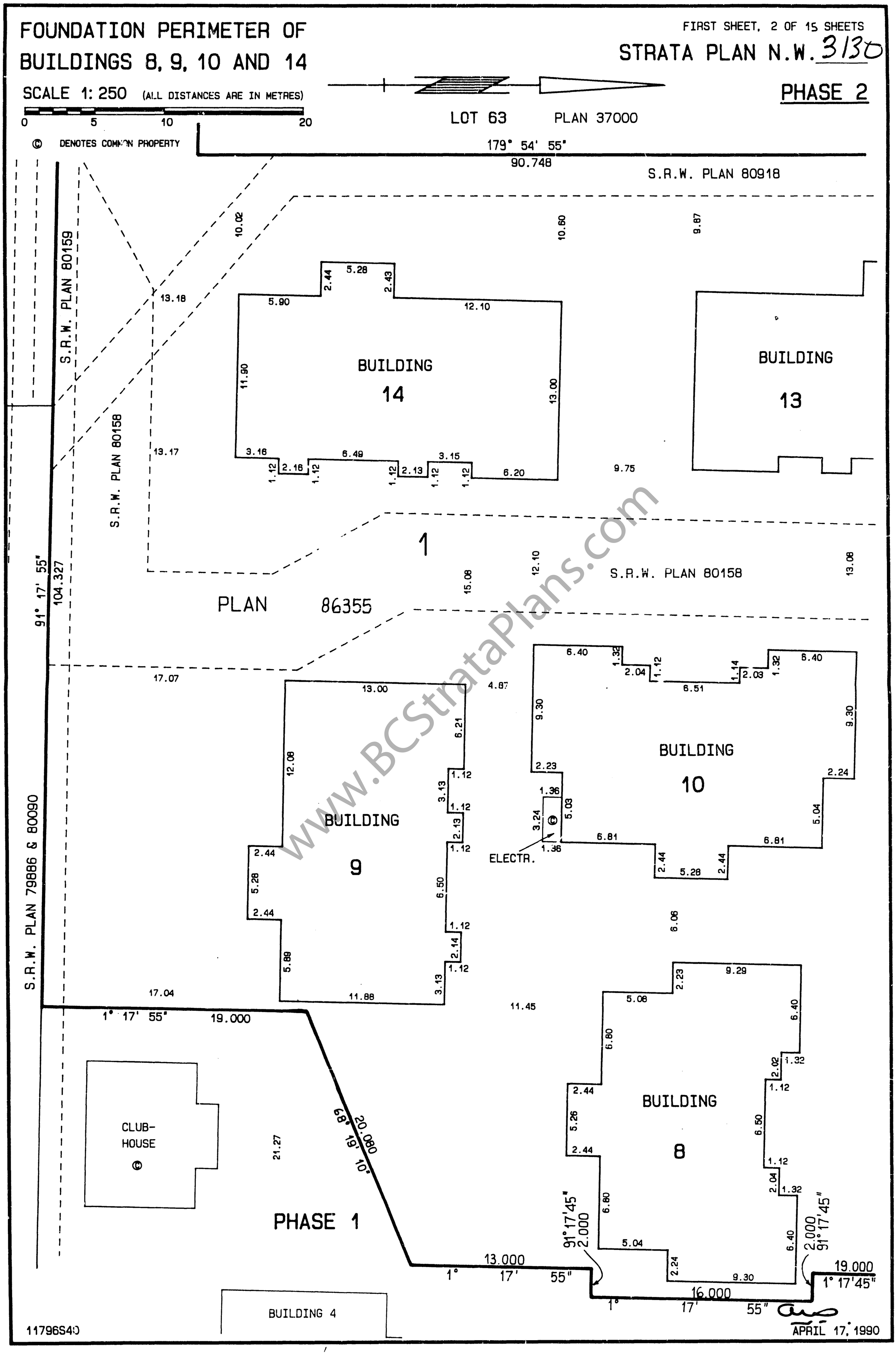

11796S40

APRIL 17, 1990

www.BCStrataPlans.com

FOUNDATION PERIMETER OF BUILDINGS 11, 12 AND 13

FIRST SHEET, 3 OF 15 SHEETS

STRATA PLAN N.W.3130

PHASE 2

SCALE 1:250 (ALL DISTANCES ARE IN METRES)

0 5 10 20

© DENOTES COMMON PROPERTY

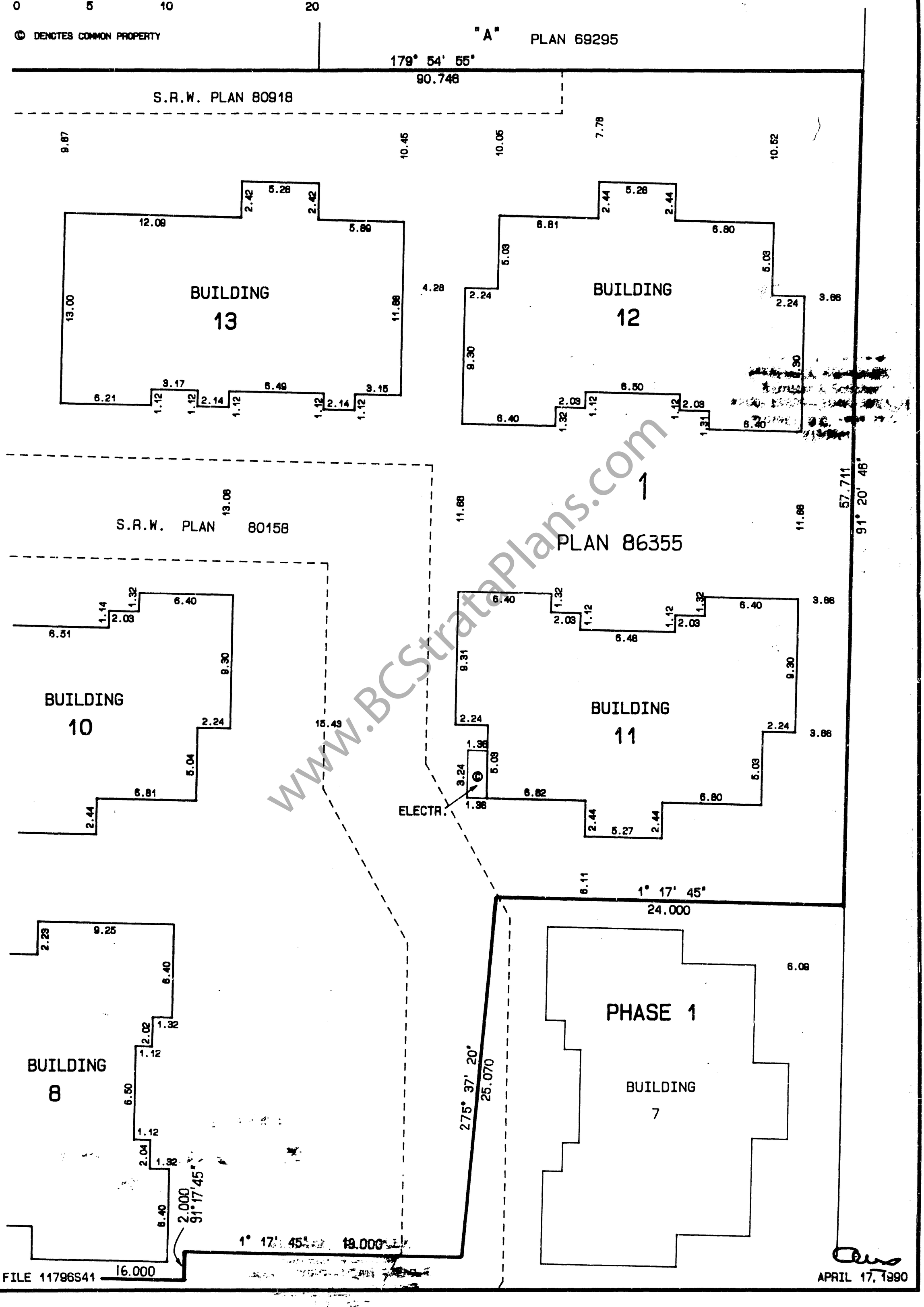

FILE 11796S41

APRIL 17, 1990

www.BCStrataPlans.com

STRATA PLAN N.W. 3130
PHASE 2

		FORM 1	FORM 2	FORM 3
		SCHEDULE OF UNIT ENTITLEMENT	SCHEDULE OF INTEREST UPON DESTRUCTION	SCHEDULE OF VOTING RIGHTS
STRATA LOT No.	SHEET No.	UNIT ENTITLEMENT	INTEREST UPON DESTRUCTION	NUMBER OF VOTES
29	5, 12, 14	113	122	
30	5, 12, 14	113	122	
31	5, 12, 14	153	138	
32	5, 12, 14	153	138	
33	6, 12, 14	110	122	
34	6, 12, 14	110	122	
35	6, 12, 14	153	138	
36	6, 12, 14	153	138	
37	7, 12, 14	113	122	
38	7, 12, 14	113	122	
39	7, 12, 14	153	138	
40	7, 12, 14	153	138	
41	8, 12, 14	113	122	
42	8, 12, 14	113	122	
43	8, 12, 14	153	138	
44	8, 12, 14	153	138	
45	9, 13, 15	113	122	
46	9, 13, 15	113	122	
47	9, 13, 15	153	138	
48	9, 13, 15	153	138	
49	10, 13, 15	110	122	
50	10, 13, 15	110	122	
51	10, 13, 15	153	138	
52	10, 13, 15	153	138	
53	11, 13,	110	122	
54	11, 13, 15	110	122	
55	11, 13, 15	153	138	
56	11, 13, 15	153	138	
AGGREGATE		3706	3640	

NOTE : UNIT ENTITLEMENT IS BASED ON HABITABLE AREA.
INTEREST UPON DESTRUCTION IS BASED ON VALUE OF EACH UNIT.

SCOTT-TYCAN PROJECT LTD.
(INCORPORATION No 345543)

AUTHORIZED SIGNATORY
LEONARD MORIN

WITNESS

OCCUPATION

ADDRESS

SECURITY PACIFIC BANK CANADA

AUTHORIZED SIGNATORY
Bob Wigmore Rod Sorbo

WITNESS Dave Munson
BANKER

OCCUPATION
574 BRINK 4

ADDRESS
VANCOUVER.

ACCEPTED AS TO FORMS 1, 2 AND 3.
THIS 16 DAY OF MAY 1990

SUPERINTENDENT OF REAL ESTATE

STATUTORY DECLARATION

I, THE UNDERSIGNED, DO SOLEMNLY DECLARE THAT:

1.- I, THE UNDERSIGNED, AM THE DULY AUTHORIZED AGENT OF THE OWNER DEVELOPER.

2.- THE STRATA PLAN IS ENTIRELY FOR RESIDENTIAL USE.

I MAKE THIS SOLEMN DECLARATION CONSCIENTIOUSLY, BELIEVING IT TO BE TRUE AND KNOWING IT IS OF THE SAME FORCE AND EFFECT AS IF MADE UNDER OATH.

AUTHORIZED SIGNATORY FOR THE
AGENT OF THE OWNER-DEVELOPER

DECLARED BEFORE ME AT SURREY IN THE
PROVINCE OF BRITISH COLUMBIA,
THIS 27th DAY OF APRIL 1990

A COMMISSIONER FOR TAKING AFFIDAFITS
WITHIN BRITISH COLUMBIA

I, A.M.OSMAN, A BRITISH COLUMBIA LAND SURVEYOR, HEREBY CERTIFY THAT THE SEVEN BUILDINGS SHOWN IN THIS STRATA PLAN HAVE NOT, AS OF THE 17th OF NOVEMBER 1989, BEEN PREVIOUSLY OCCUPIED.
DATED AT LANGLEY B.C.THIS 17th DAY OF APRIL, 1990

B.C.L.S.

FILE 11796S46

www.BCStrataPlans.com

STRATA PLAN N.W.3130

BUILDING 8

STRATA LOTS 29 TO 32

SCALE 1:200

0 5 10 15 20

ALL DISTANCES ARE IN METRES

LEGEND

PT.S.L. DENOTES PART STRATA LOT
m² DENOTES SQUARE METRES
L.C.P. DENOTES LIMITED COMMON PROPERTY
© DENOTES COMMON PROPERTY

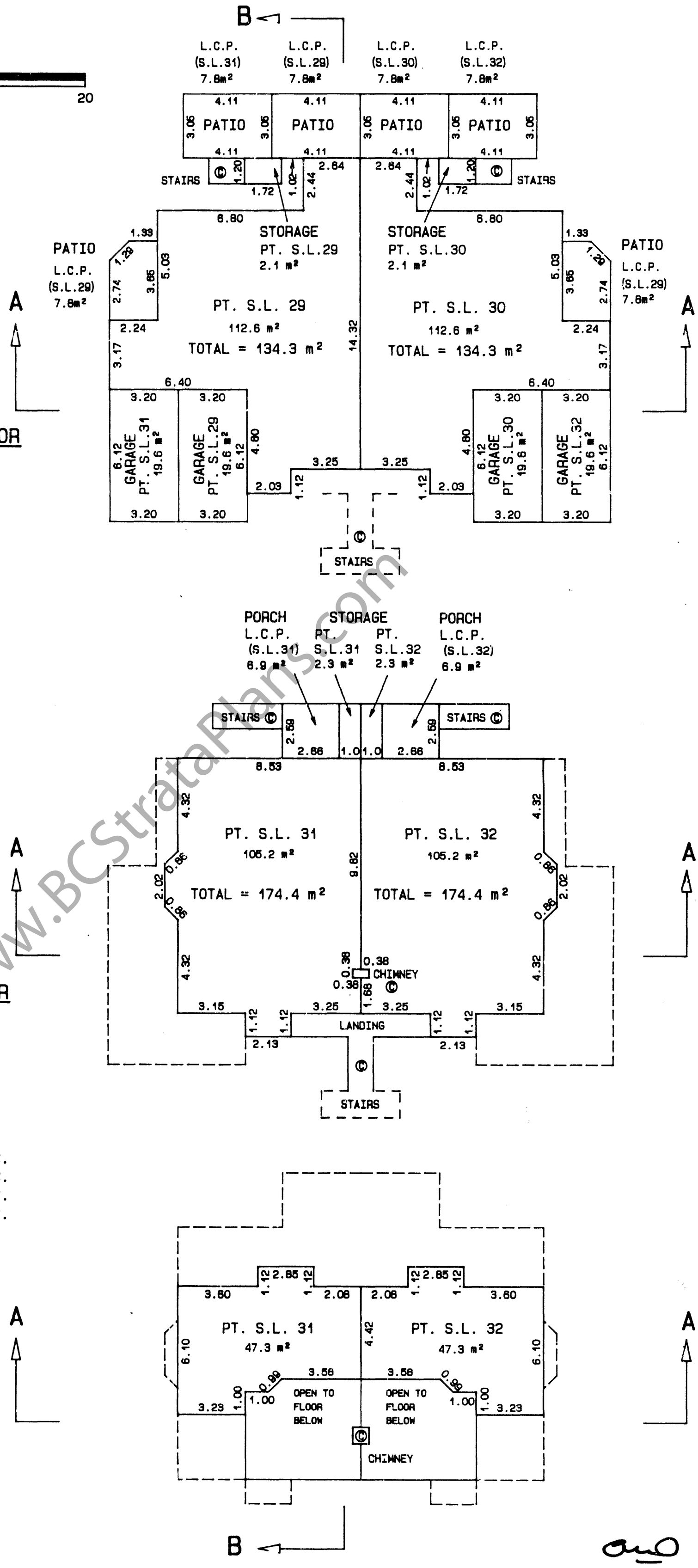

CIVIC ADDRESSES:

S.L.29 #109-7837 120"A" STREET SURREY B.C.
S.L.30 #110-7837 120"A" STREET SURREY B.C.
S.L.31 #209-7837 120"A" STREET SURREY B.C.
S.L.32 #210-7837 120"A" STREET SURREY B.C.

FILE 11796S31

APRIL 17, 1990

www.BCStrataPlans.com

BUILDING 9

STRATA LOTS 33 TO 36

SCALE 1: 200

0 5 10 15 20

ALL DISTANCES ARE IN METRES

STRATA PLAN N.W.3130

LEGEND

PT.S.L.	DENOTES PART STRATA LOT
m²	DENOTES SQUARE METRES
L.C.P.	DENOTES LIMITED COMMON PROPERTY
©	DENOTES COMMON PROPERTY

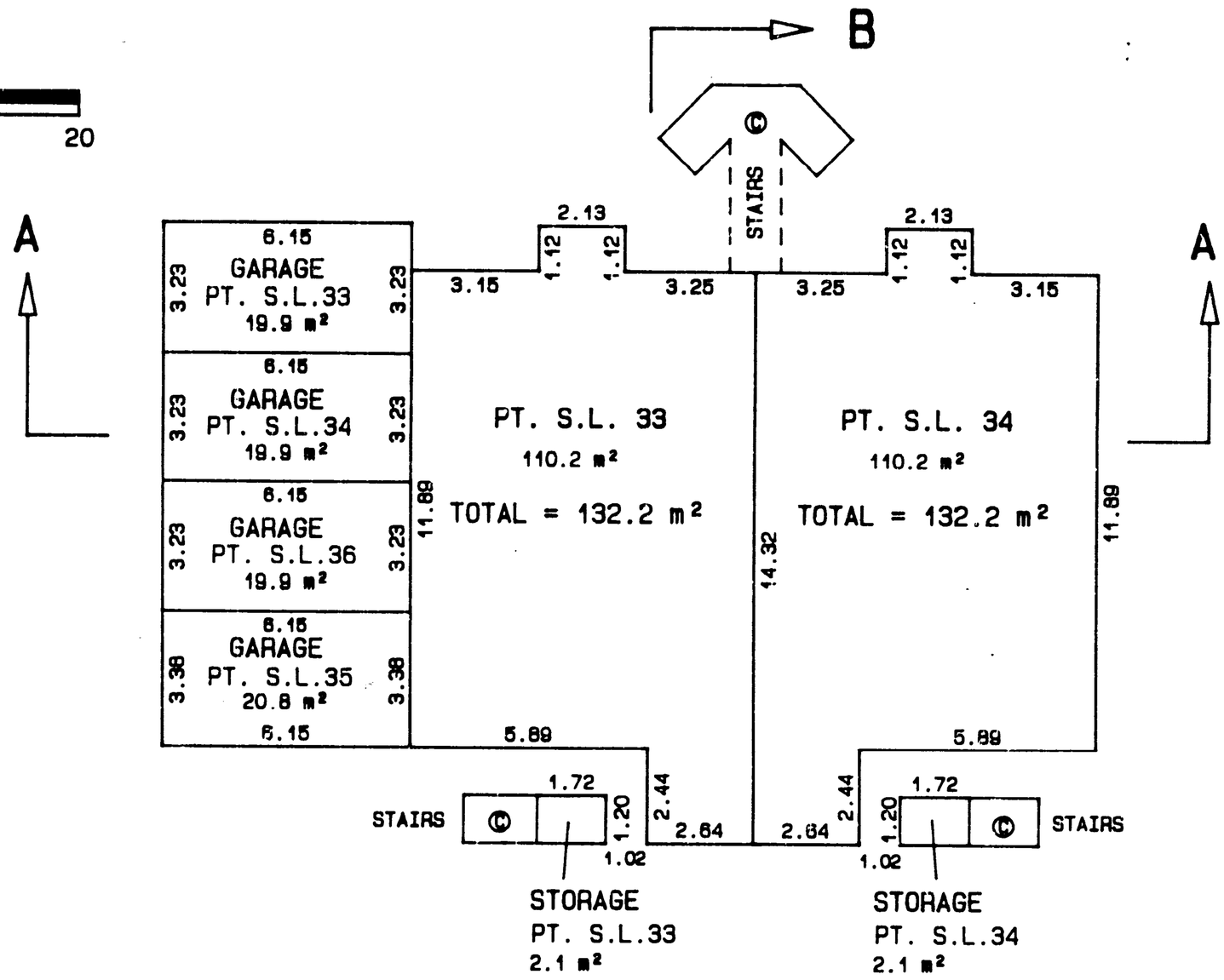

GROUND FLOOR

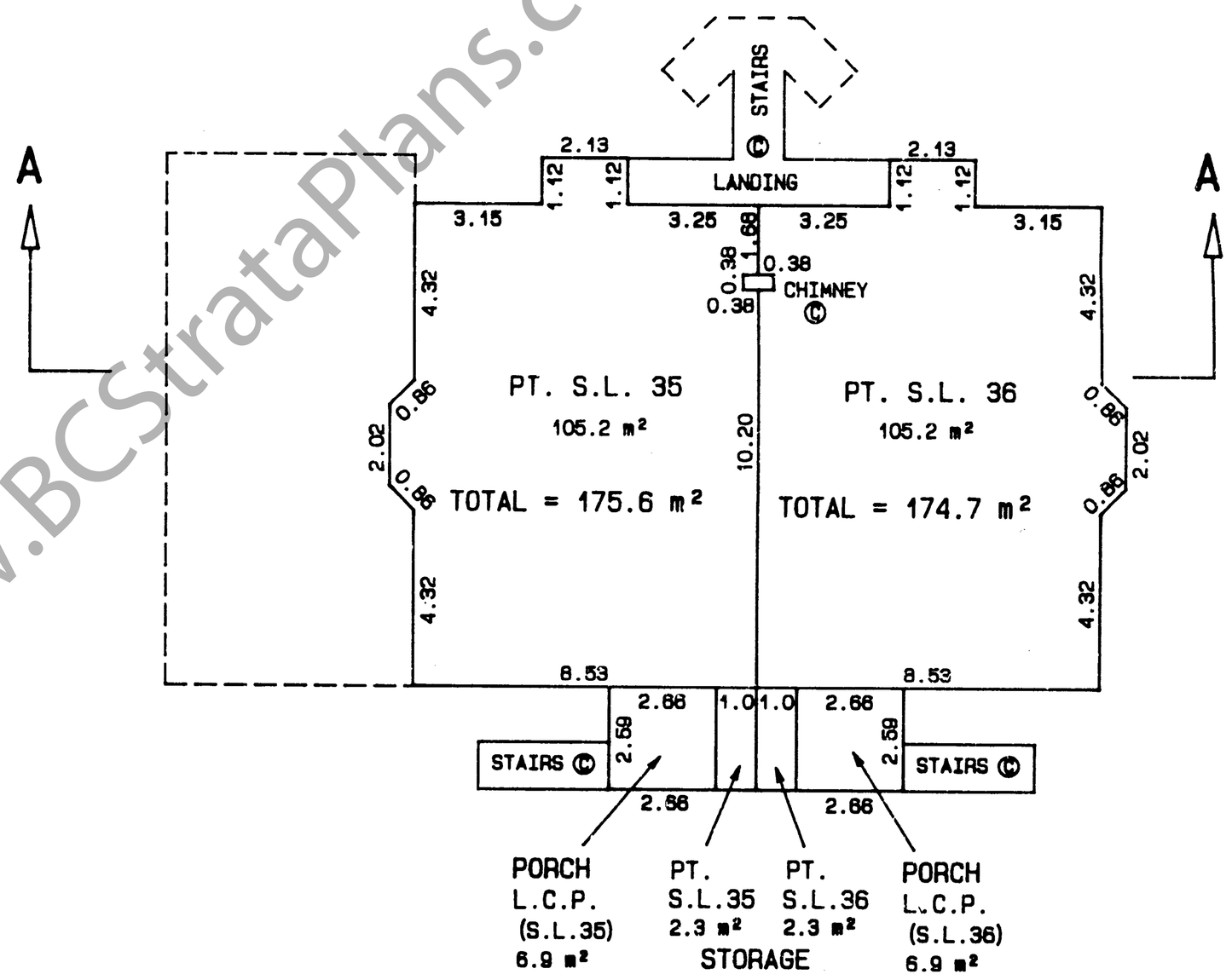

FIRST FLOOR

www.BCStrataPlans.com

CIVIC ADDRESSES:

S.L.33 #113-7837 120"A" STREET SURREY B.C.
S.L.34 #114-7837 120"A" STREET SURREY B.C.
S.L.35 #213-7837 120"A" STREET SURREY B.C.
S.L.36 #214-7837 120"A" STREET SURREY B.C.

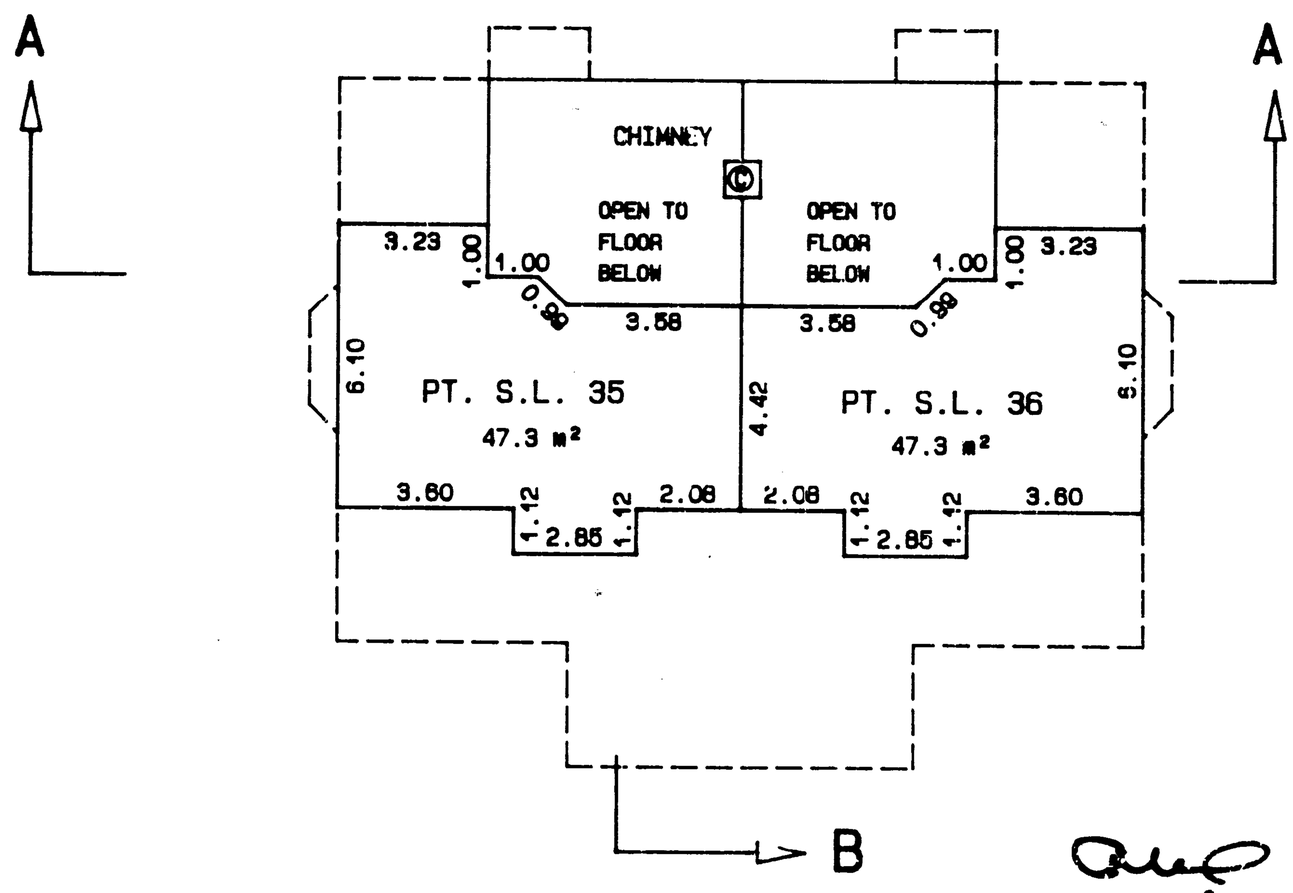

LOFT FLOOR

FILE 11796S32

APRIL 17, 1990

STRATA PLAN N.W. 3130

BUILDING 10

STRATA LOTS 37 TO 40

SCALE 1: 200

0 5 10 15 20

ALL DISTANCES ARE IN METRES

LEGEND

PT.S.L. DENOTES PART STRATA LOT
m² DENOTES SQUARE METRES
L.C.P. DENOTES LIMITED COMMON PROPERTY
Ⓒ DENOTES COMMON PROPERTY

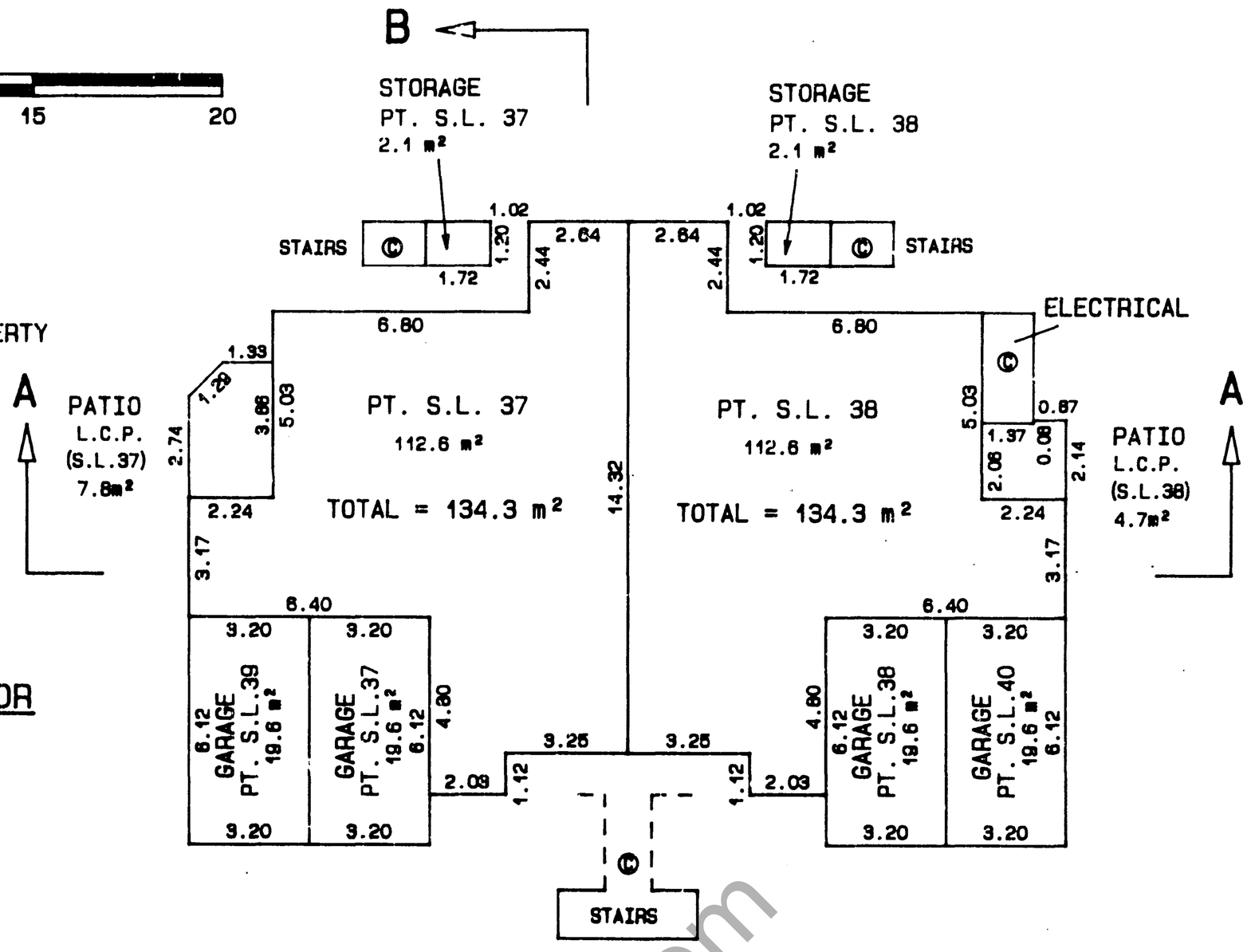

GROUND FLOOR

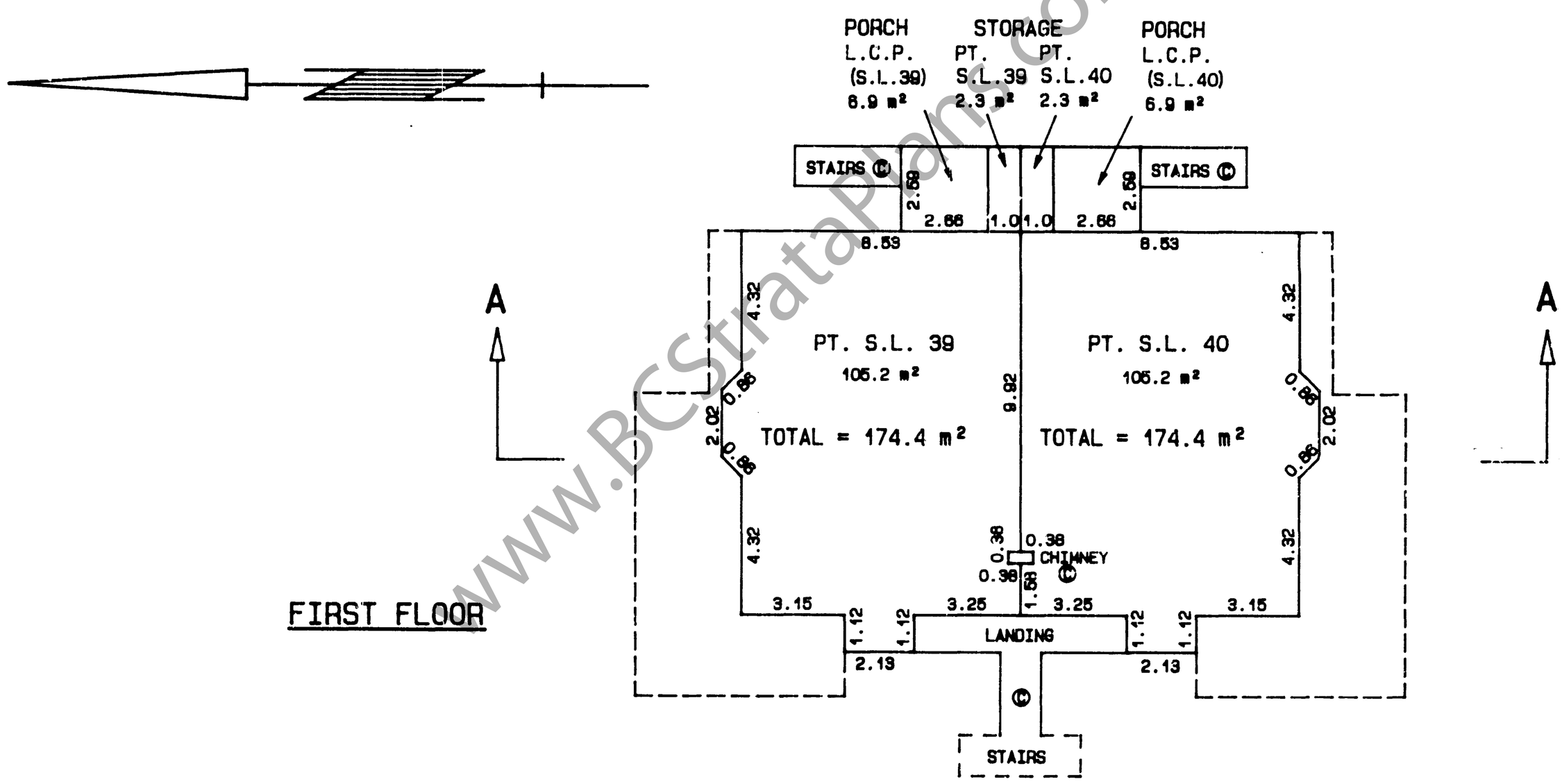

FIRST FLOOR

CIVIC ADDRESSES:

S.L.37 #111-7837 120"A" STREET SURREY B.C.
S.L.38 #112-7837 120"A" STREET SURREY B.C.
S.L.39 #211-7837 120"A" STREET SURREY B.C.
S.L.40 #212-7837 120"A" STREET SURREY B.C.

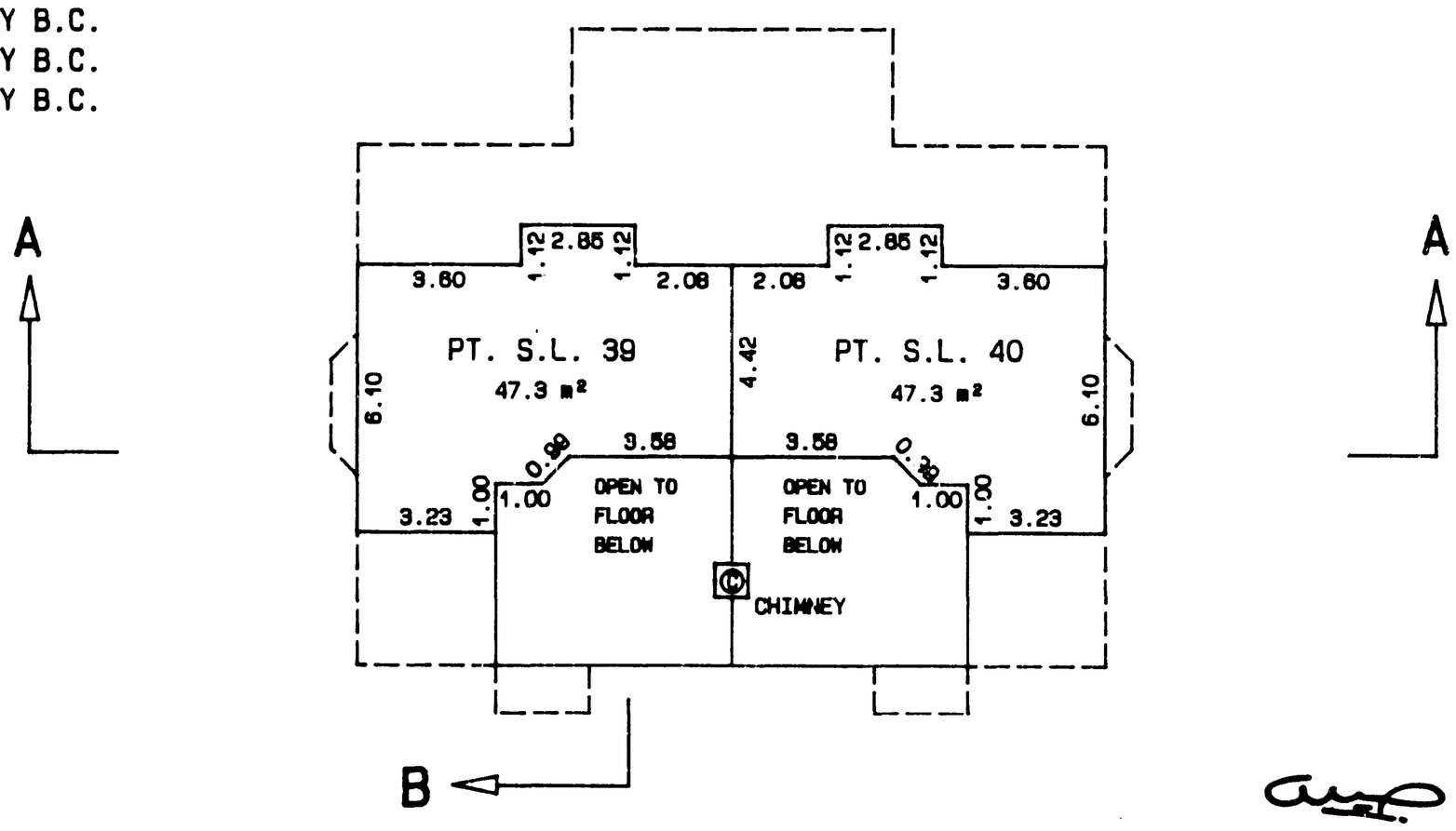

LOFT FLOOR

www.BCStrataPlans.com

FILE 11796S33

APRIL 17, 1990

STRATA PLAN N.W.3130

BUILDING 11

STRATA LOTS 41 TO 44

SCALE 1:200

0 5 10 15 20

ALL DISTANCES ARE IN METRES

LEGEND

PT.S.L. DENOTES PART STRATA LOT
m² DENOTES SQUARE METRES
L.C.P. DENOTES LIMITED COMMON PROPERTY
© DENOTES COMMON PROPERTY

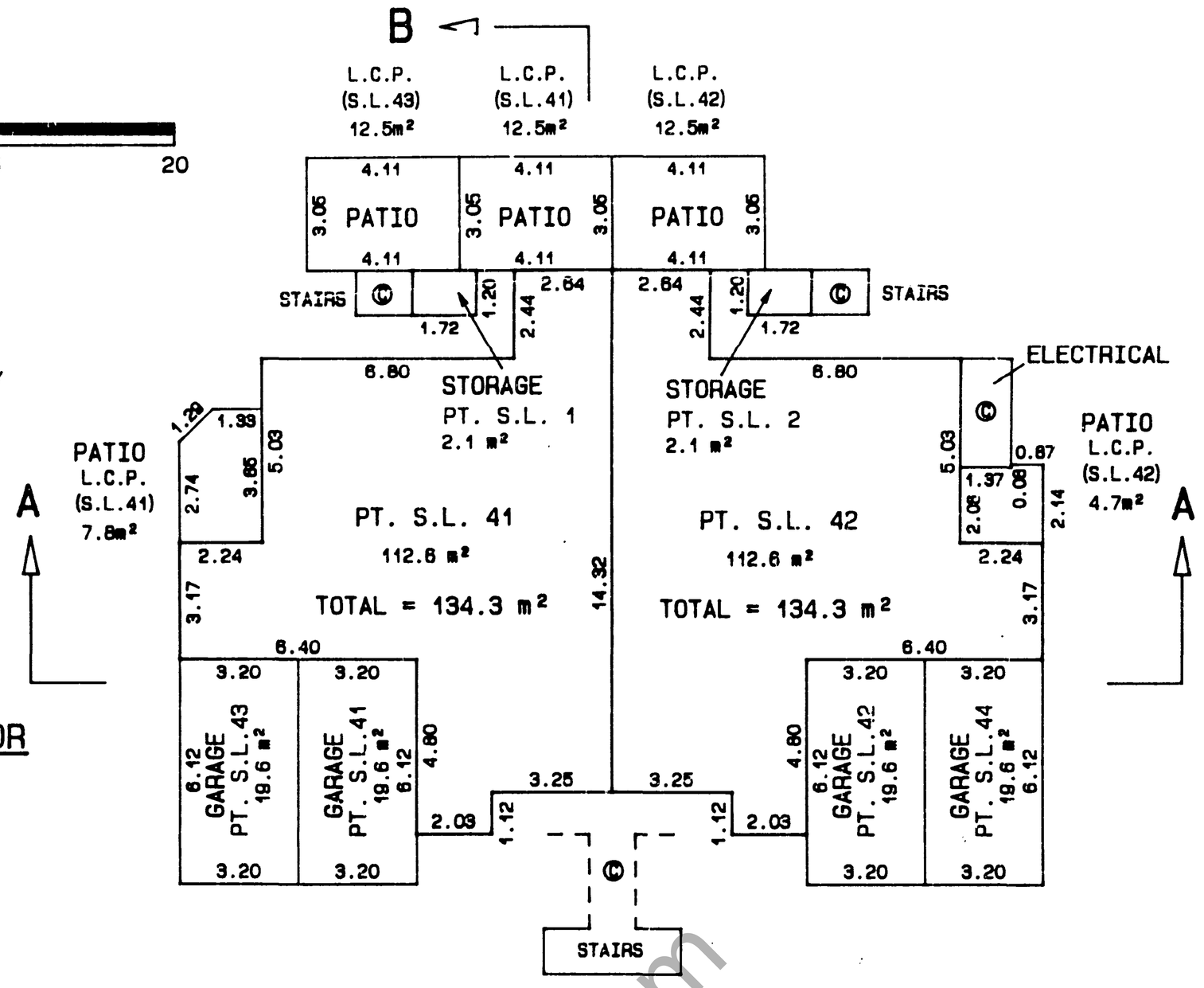

GROUND FLOOR

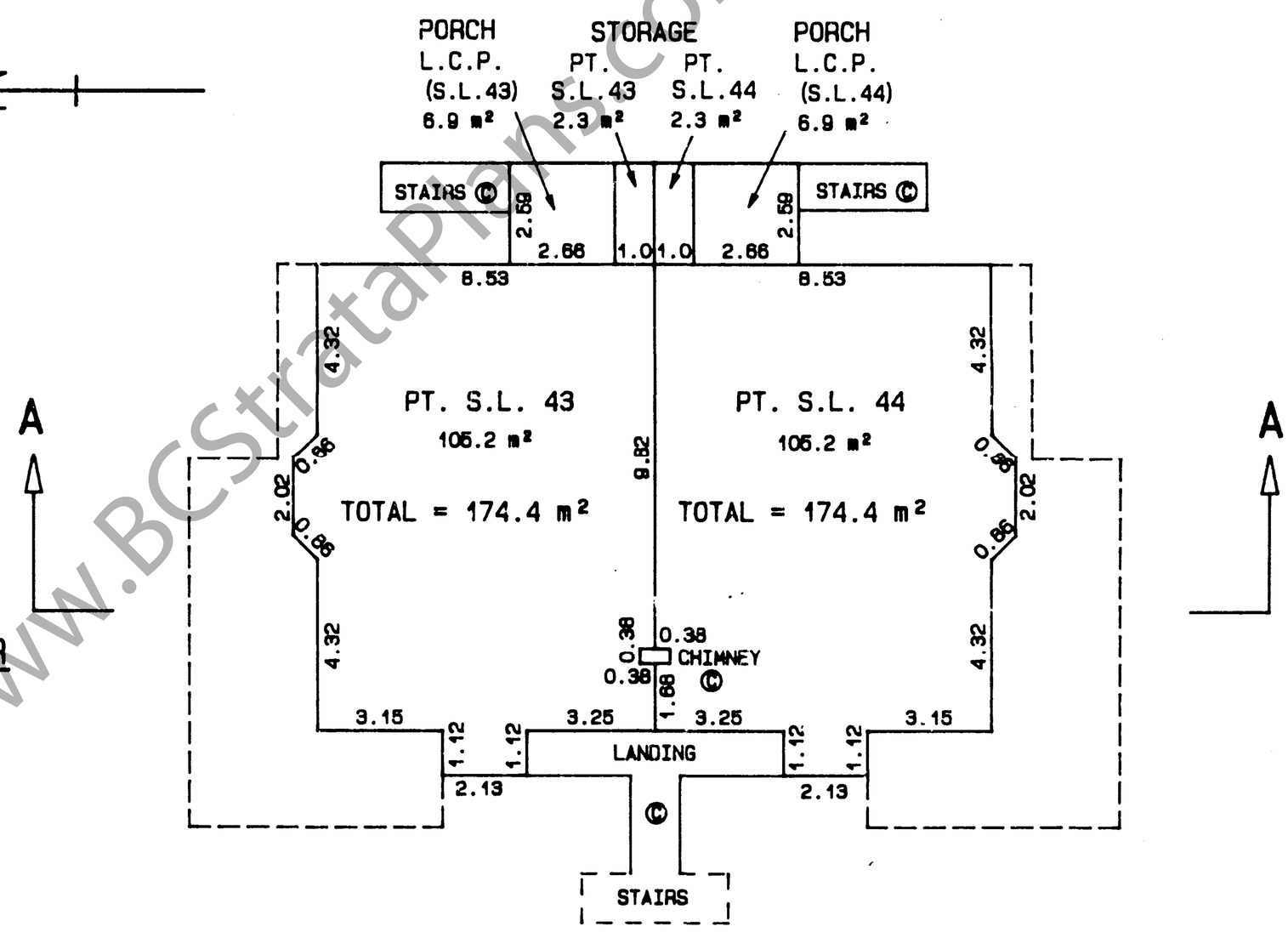

FIRST FLOOR

www.BCStrataPlans.com

CIVIC ADDRESSES:

S.L.41 #122-7837 120"A" STREET SURREY B.C.
S.L.42 #123-7837 120"A" STREET SURREY B.C.
S.L.43 #222-7837 120"A" STREET SURREY B.C.
S.L.44 #223-7837 120"A" STREET SURREY B.C.

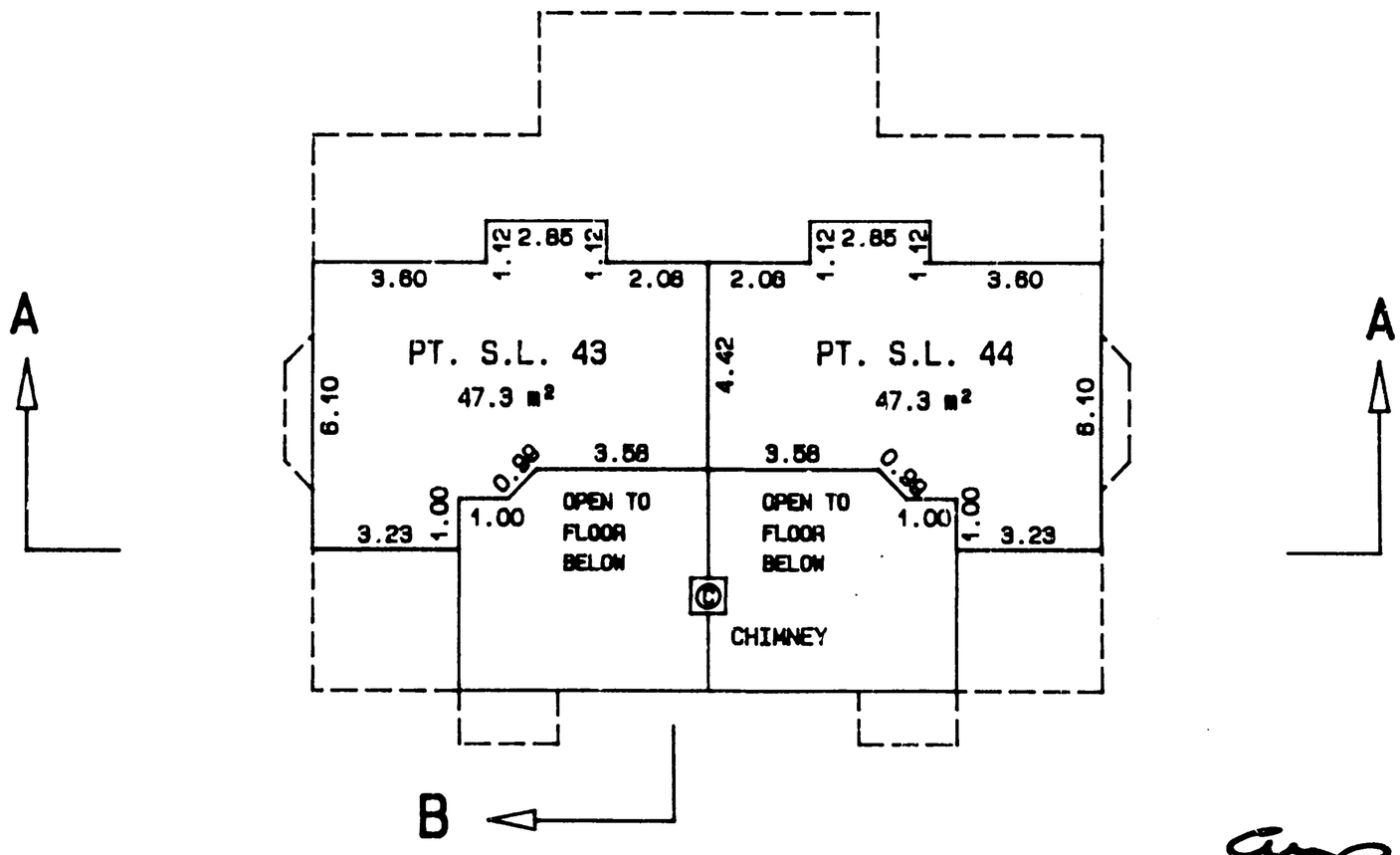

LOFT FLOOR

FILE 11796S34

APRIL 17, 1990

STRATA PLAN N.W.3130

BUILDING 12

STRATA LOTS 45 TO 48

SCALE 1: 200

0 5 10 15 20

ALL DISTANCES ARE IN METRES

LEGEND

PT.S.L. DENOTES PART STRATA LOT
m² DENOTES SQUARE METRES
L.C.P. DENOTES LIMITED COMMON PROPERTY
© DENOTES COMMON PROPERTY

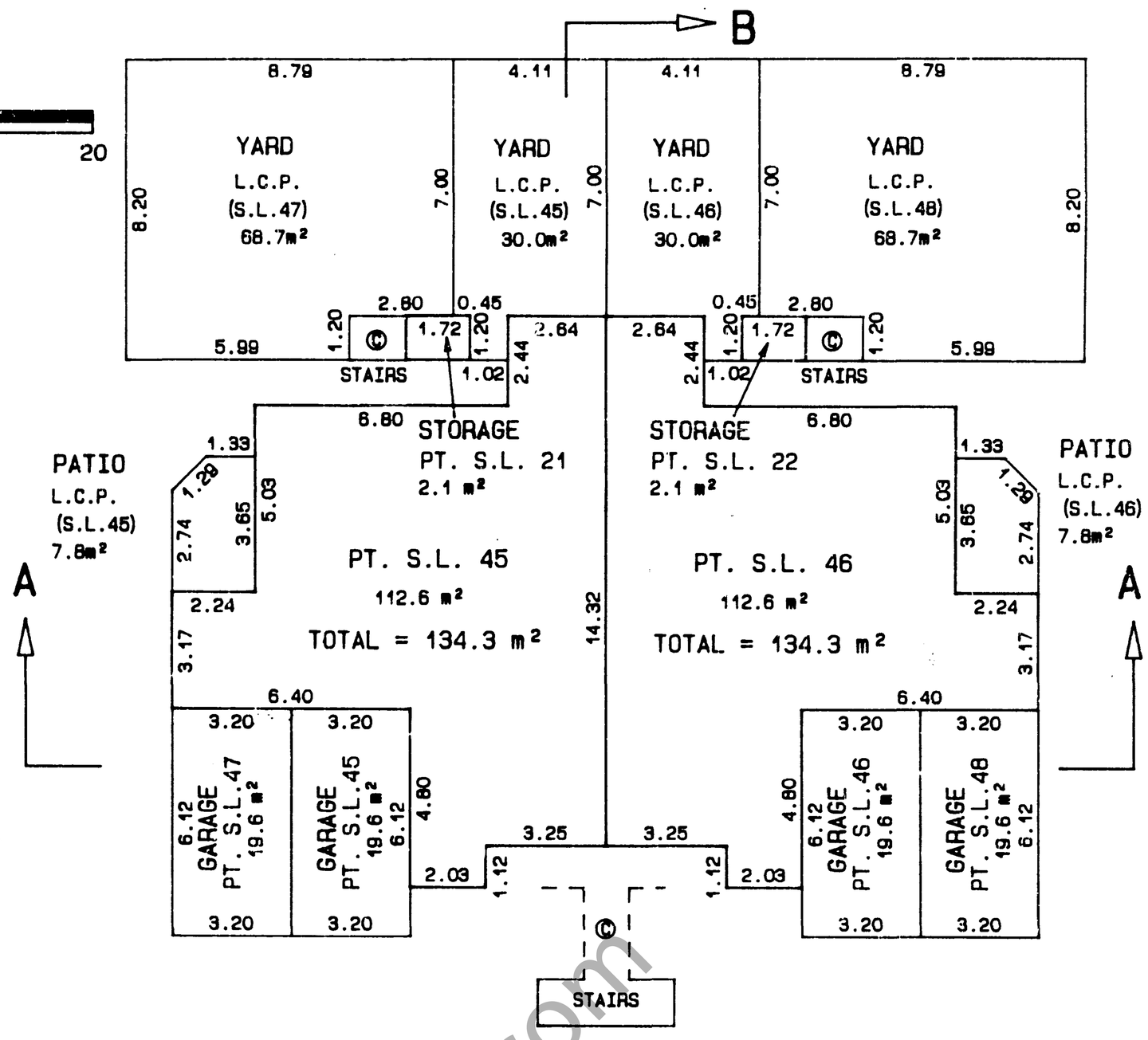

GROUND FLOOR

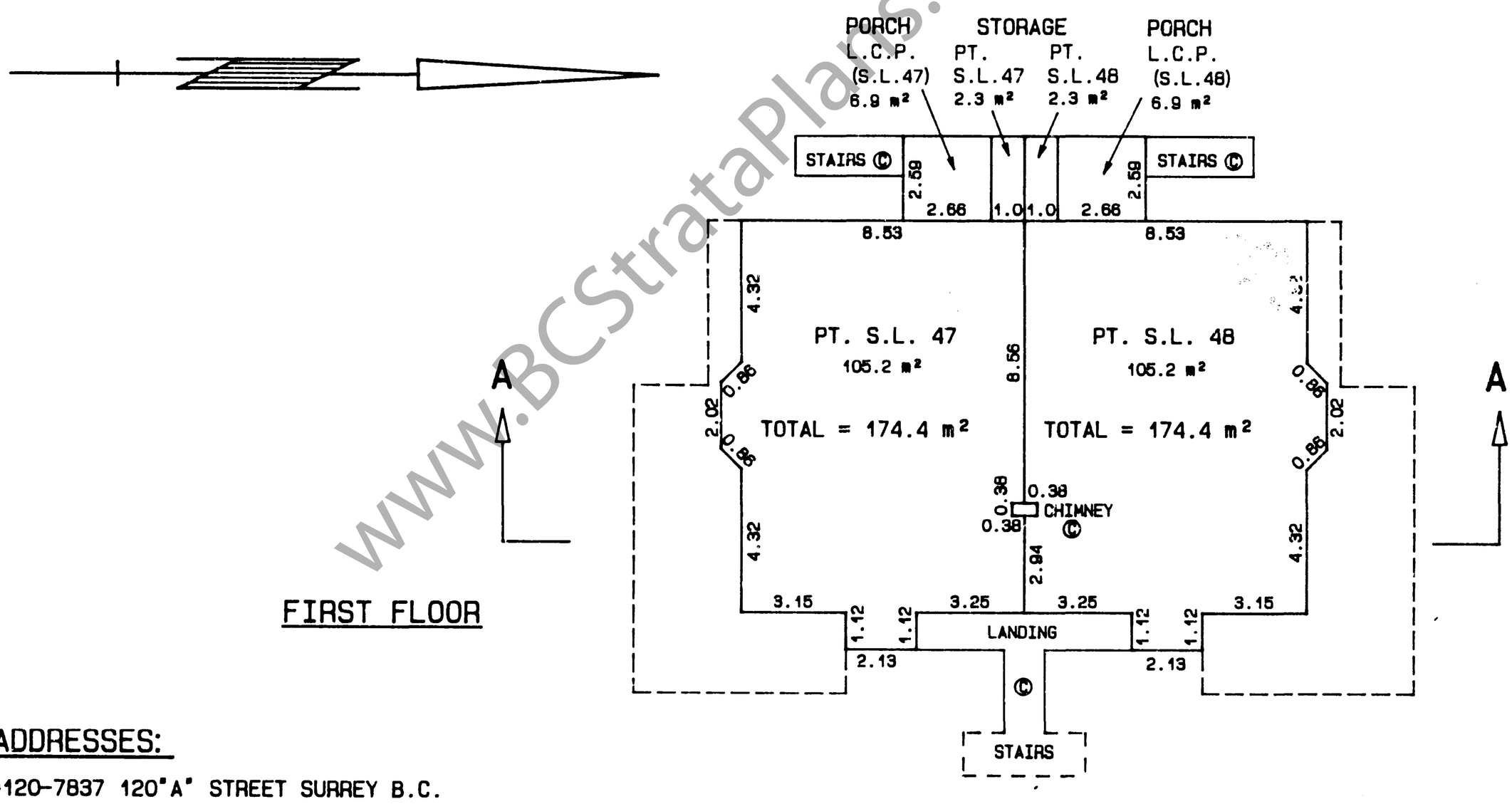

FIRST FLOOR

CIVIC ADDRESSES:

S.L.45 #120-7837 120"A" STREET SURREY B.C.
S.L.46 #121-7837 120"A" STREET SURREY B.C.
S.L.47 #220-7837 120"A" STREET SURREY B.C.
S.L.48 #221-7837 120"A" STREET SURREY B.C.

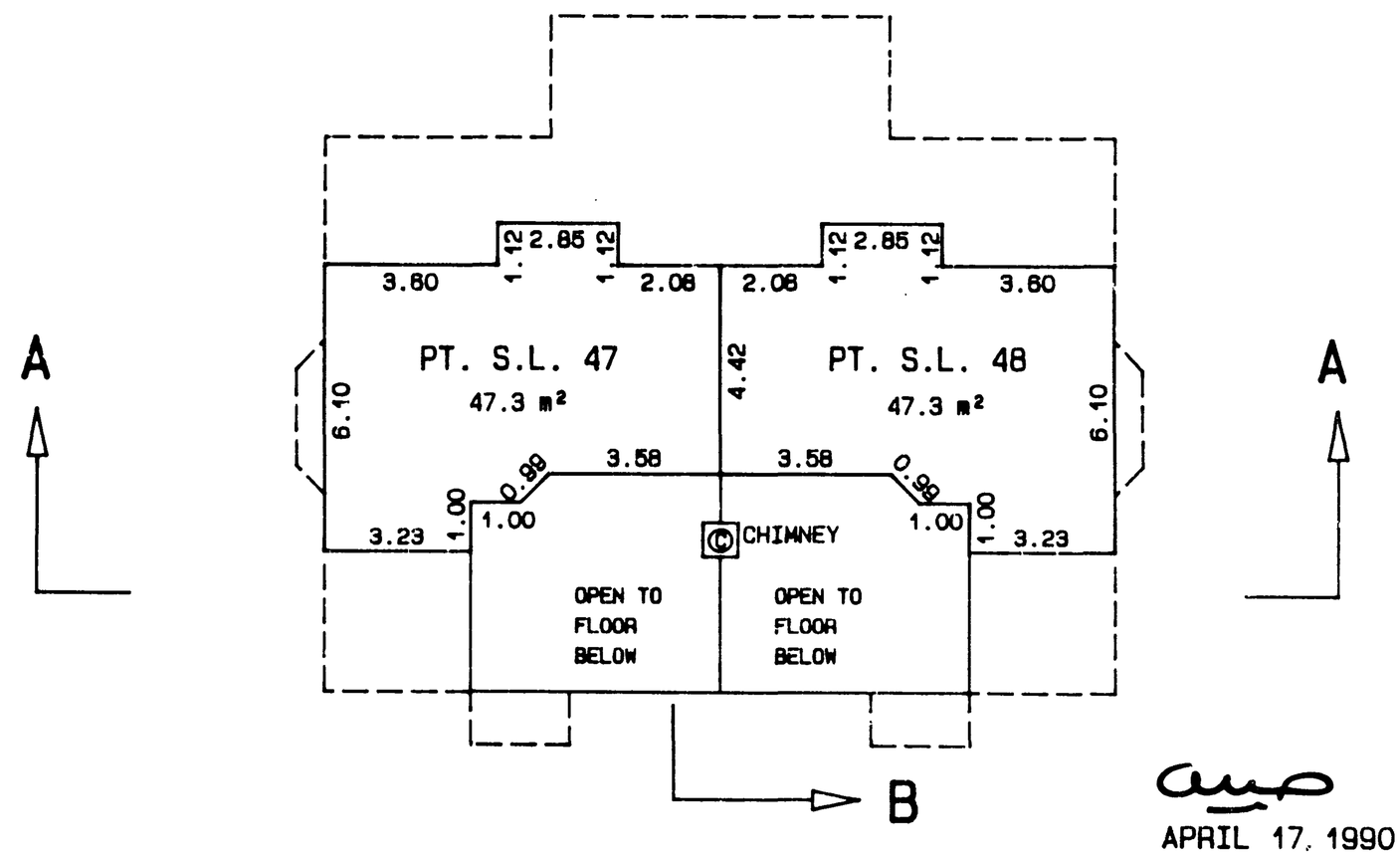

LOFT FLOOR

FILE 11796S35

APRIL 17, 1990

www.BCStrataPlans.com

STRATA PLAN N.W.3130

BUILDING 13

STRATA LOTS 49 TO 52

SCALE 1:200

0 5 10 15 20

ALL DISTANCES ARE IN METRES

LEGEND

PT.S.L.	DENOTES PART STRATA LOT
m²	DENOTES SQUARE METRES
L.C.P.	DENOTES LIMITED COMMON PROPERTY
©	DENOTES COMMON PROPERTY

GROUND FLOOR

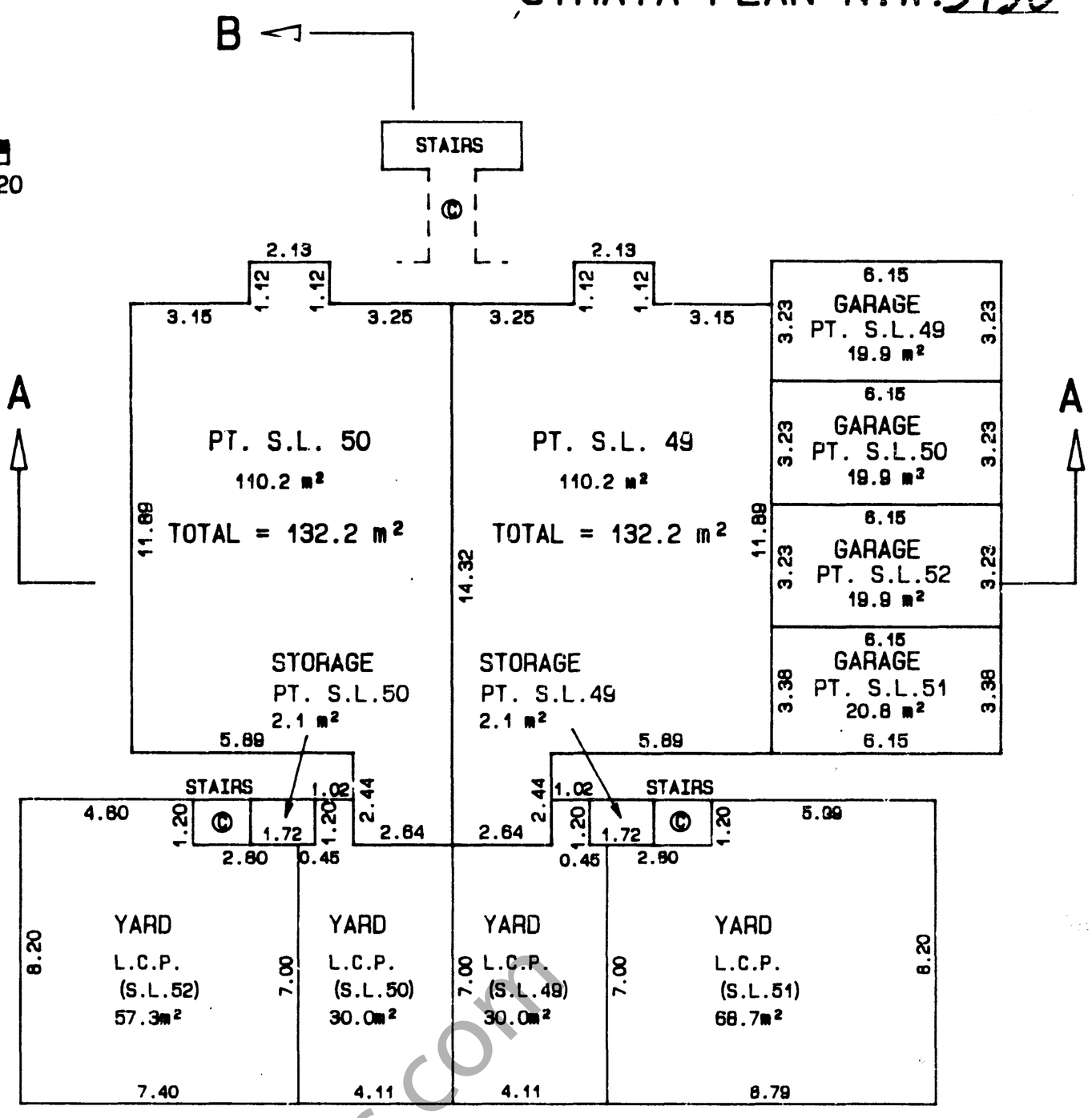

FIRST FLOOR

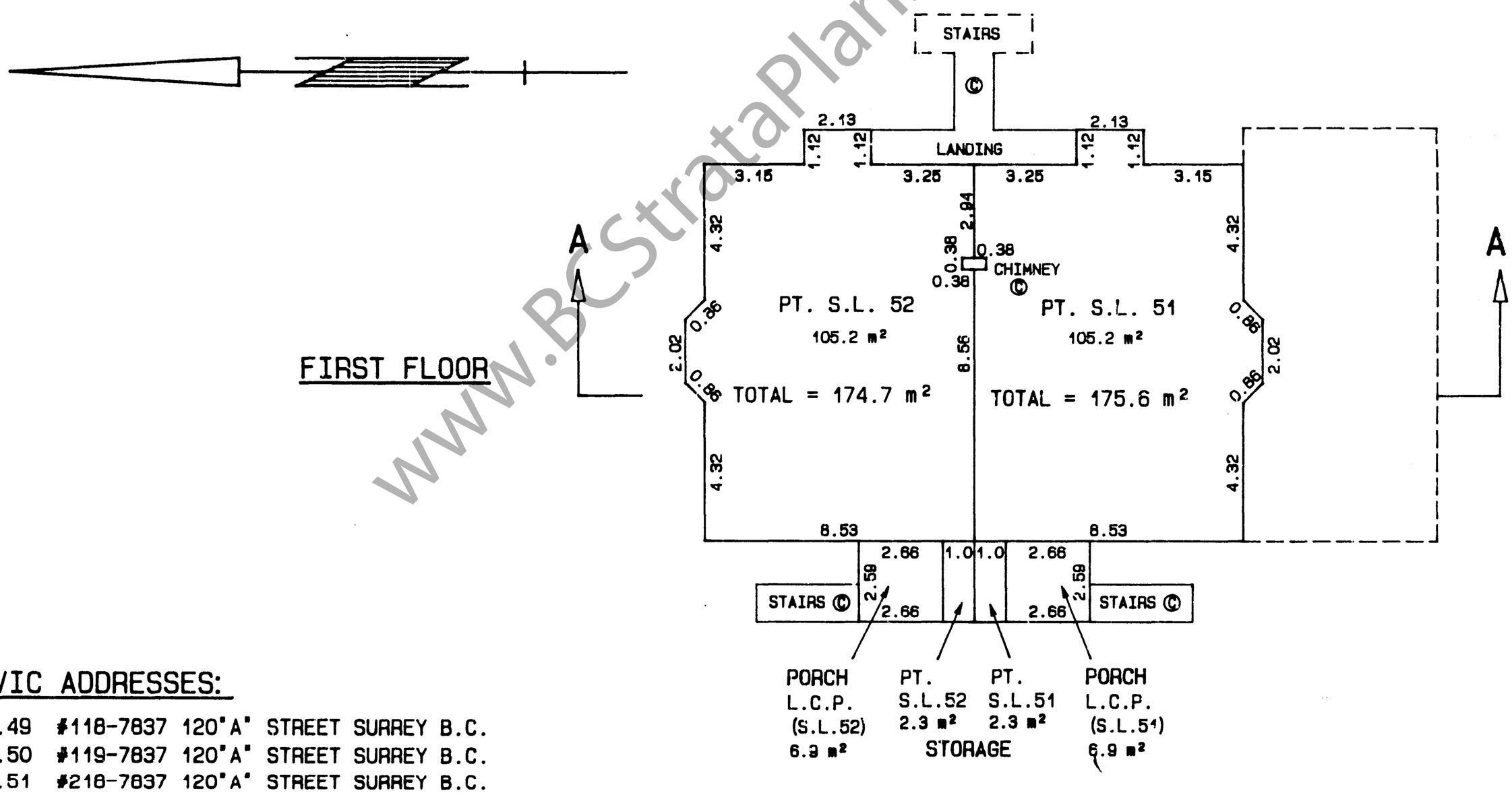

CIVIC ADDRESSES:

S.L.49 #118-7837 120"A" STREET SURREY B.C.
S.L.50 #119-7837 120"A" STREET SURREY B.C.
S.L.51 #218-7837 120"A" STREET SURREY B.C.
S.L.52 #219-7837 120"A" STREET SURREY B.C.

LOFT FLOOR

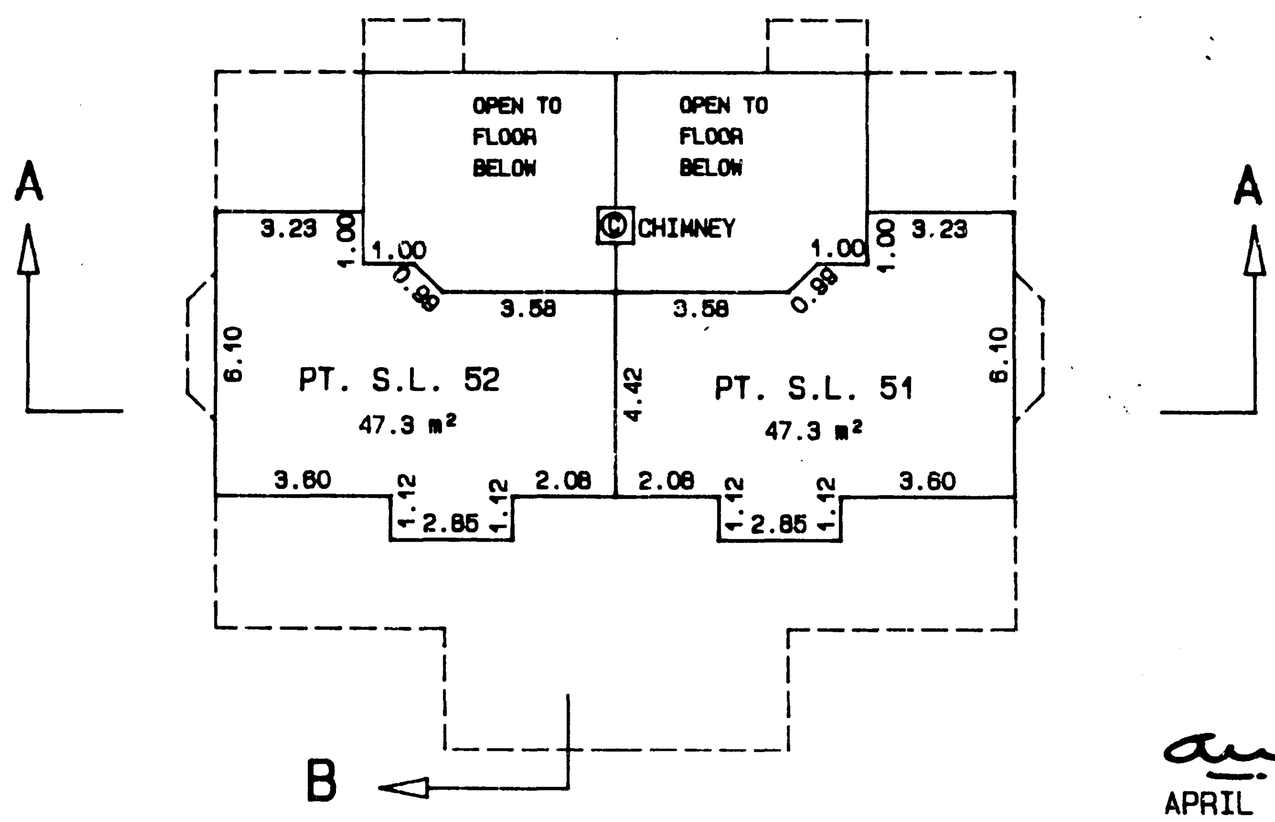

FILE 11796S36

APRIL 17, 1990

www.BCStrataPlans.com

STRATA PLAN N.W.3130

BUILDING 14

STRATA LOTS 53 TO 56

SCALE 1:200

0 5 10 15 20

ALL DISTANCES ARE IN METRES

LEGEND

PT.S.L.	DENOTES PART STRATA LOT
m²	DENOTES SQUARE METRES
L.C.P.	DENOTES LIMITED COMMON PROPERTY
©	DENOTES COMMON PROPERTY

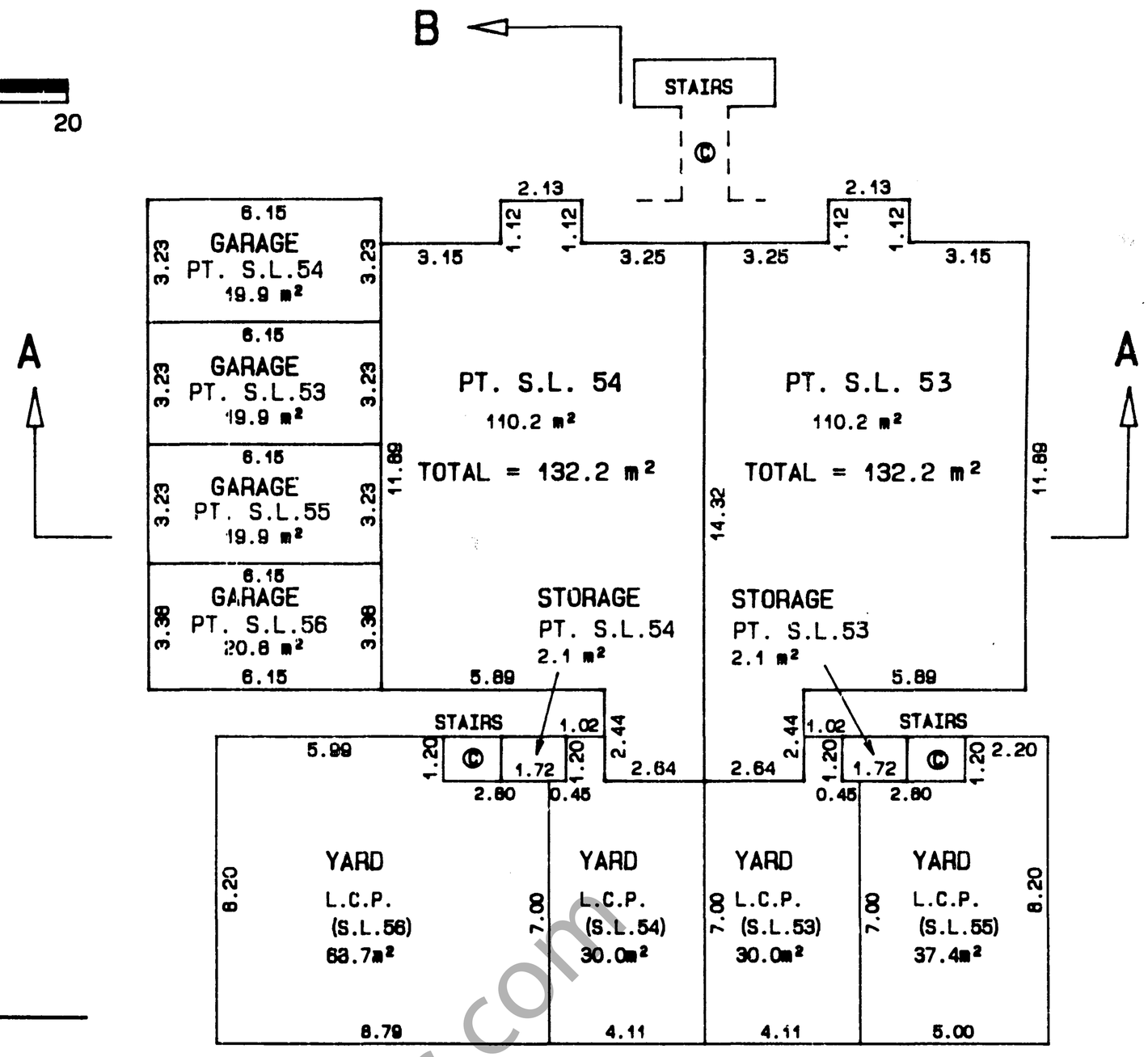

GROUND FLOOR

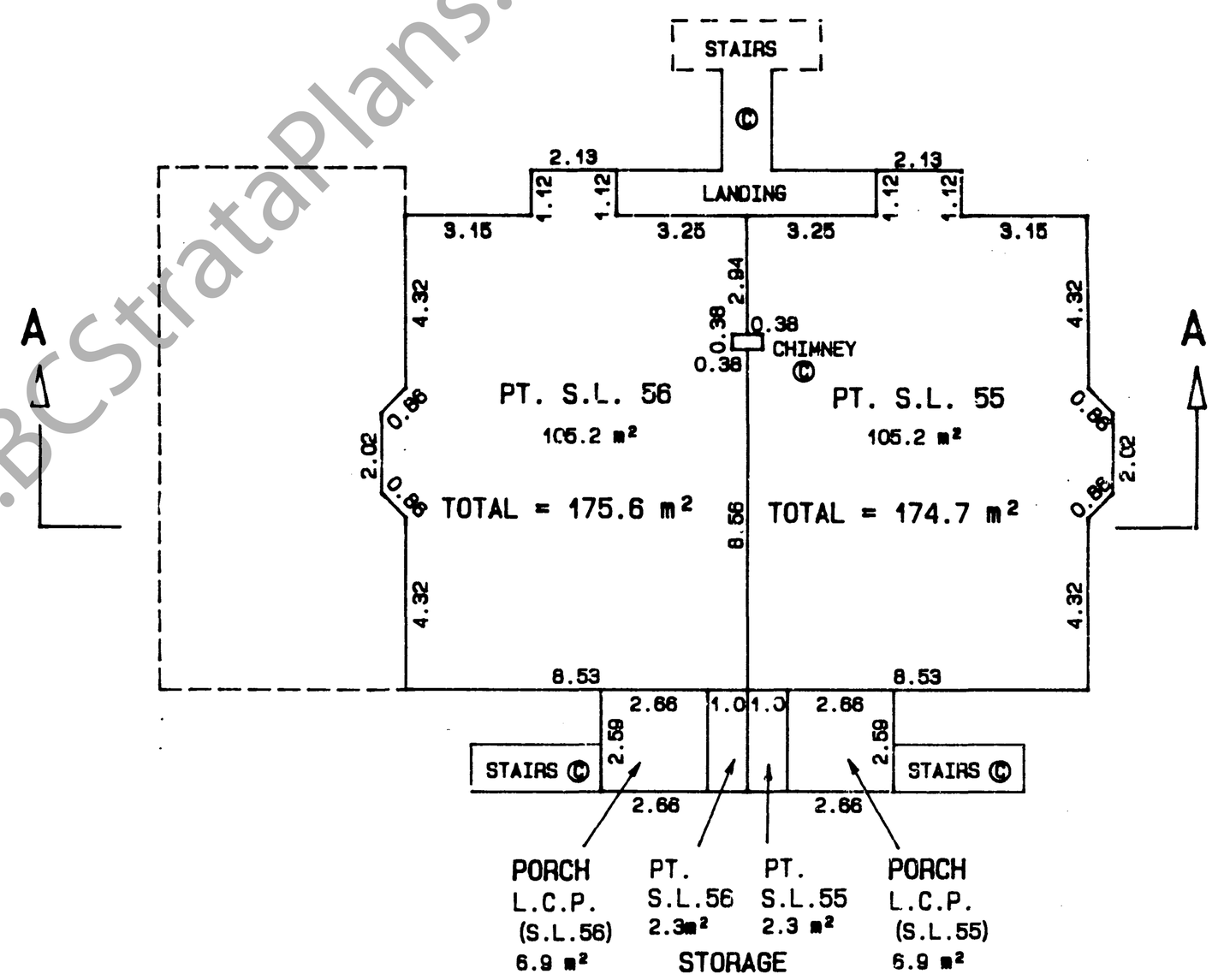

FIRST FLOOR

CIVIC ADDRESSES:

S.L.53 #116-7837 120"A" STREET SURREY B.C.
S.L.54 #117-7837 120"A" STREET SURREY B.C.
S.L.55 #216-7837 120"A" STREET SURREY B.C.
S.L.56 #217-7837 120"A" STREET SURREY B.C.

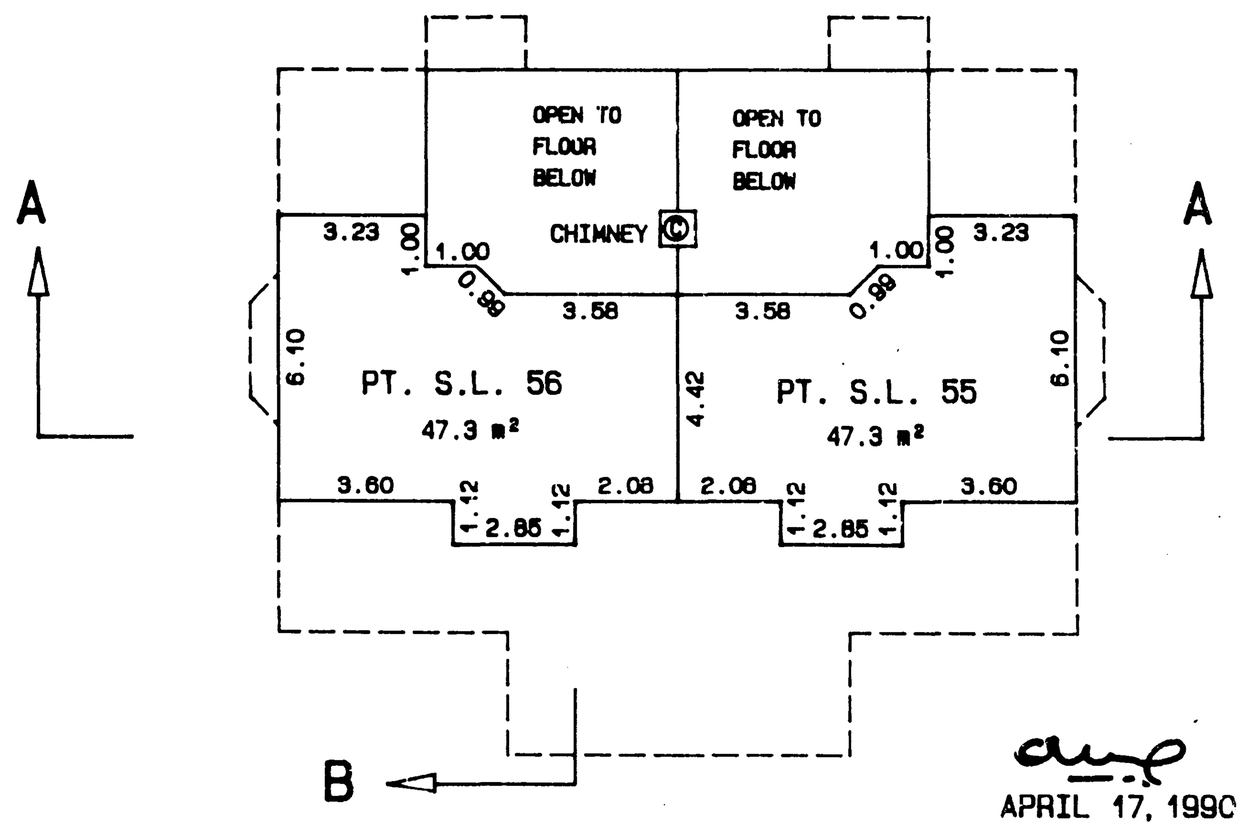

LOFT FLOOR

www.BCStrataPlans.com

FILE 11796S37

APRIL 17, 1990

STRATA PLAN N.W.3130

BUILDINGS 8 TO 11
CROSS-SECTIONS A-A

SCALE 1: 200

LEGEND

PT.S.L. DENOTES PART STRATA LOT.
m^2 DENOTES SQUARE METRES.
L.C.P. DENOTES LIMITED COMMON PROPERTY.
© DENOTES COMMON PROPERTY.

BUILDING 8

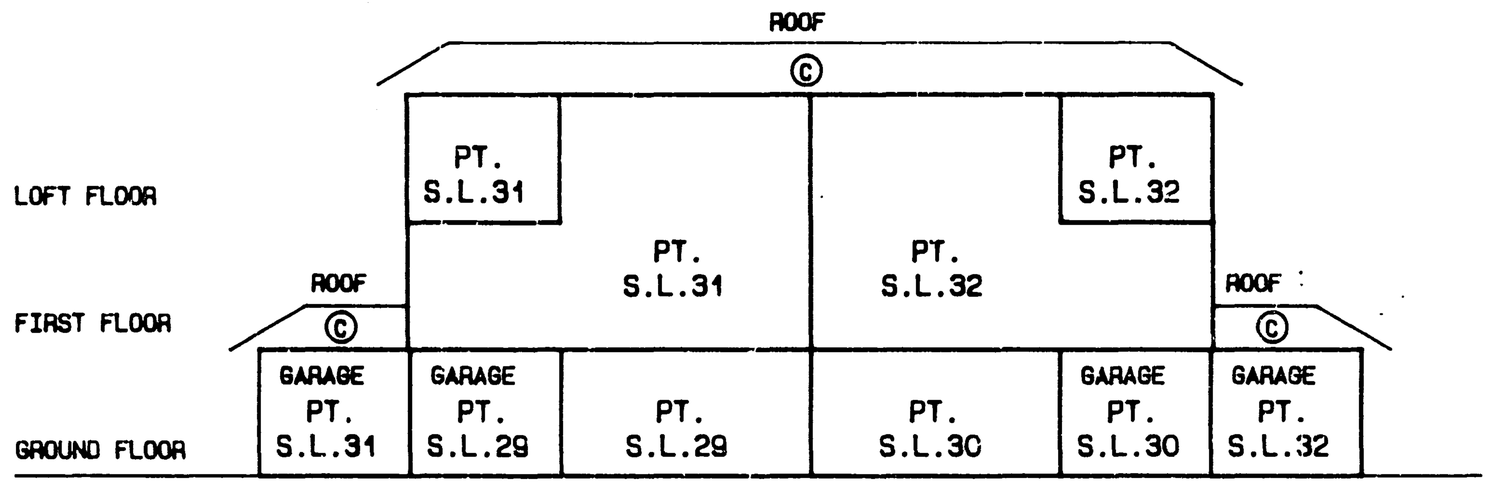

BUILDING 9

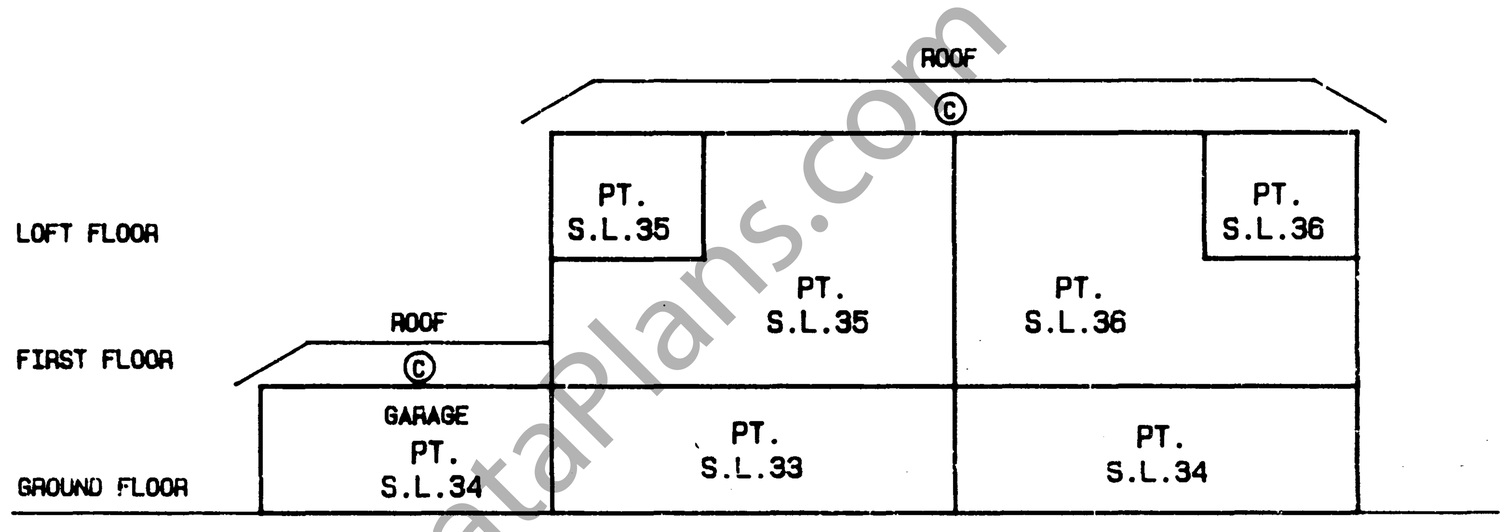

BUILDING 10

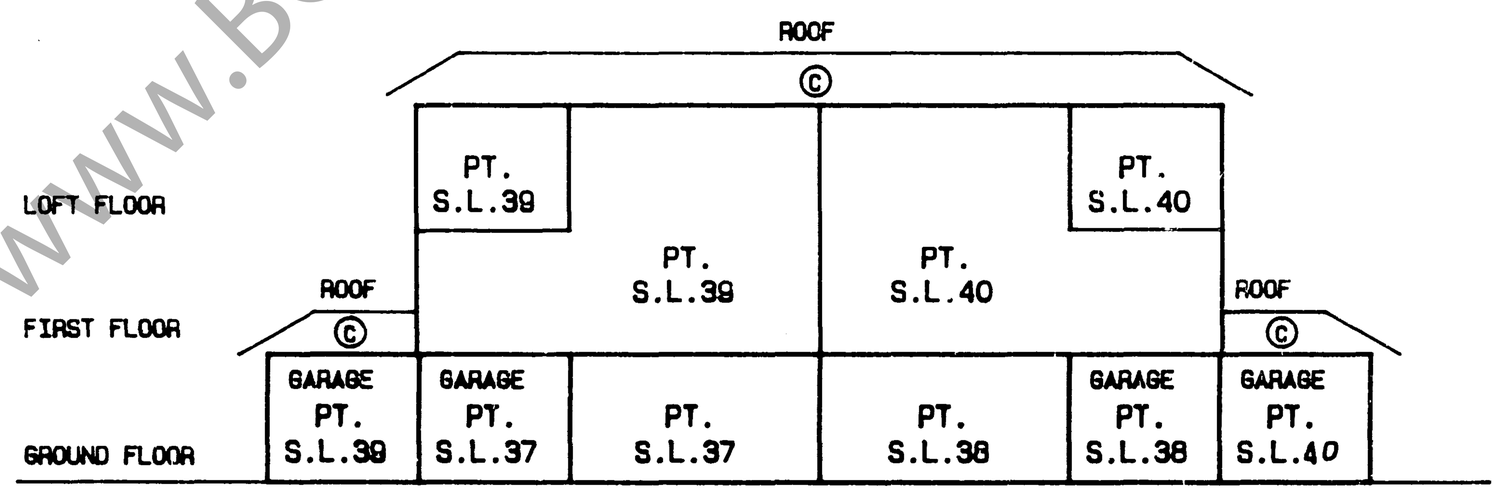

BUILDING 11

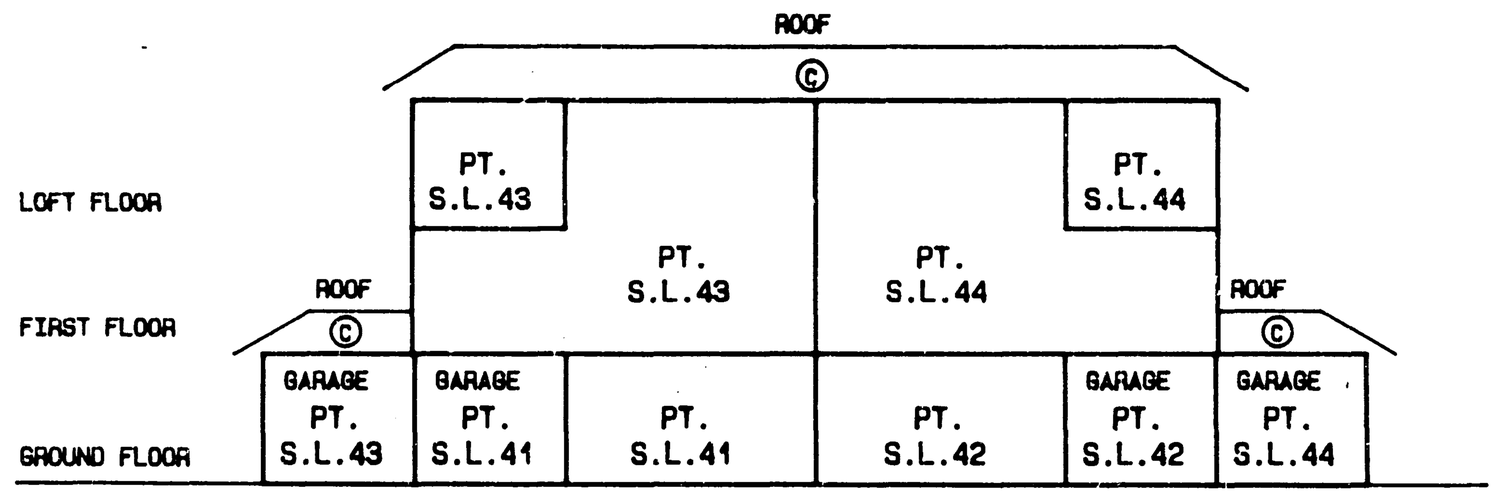

www.BCStrataPlans.com

FILE 11796S42

APRIL 17, 1990

BUILDINGS 12, 13 AND 14
CROSS-SECTIONS A-A

STRATA PLAN N.W.3130

SCALE 1:200

LEGEND

PT.S.L. DENOTES PART STRATA LOT.
m^2 DENOTES SQUARE METRES.
L.C.P. DENOTES LIMITED COMMON PROPERTY.
© DENOTES COMMON PROPERTY.

BUILDING 12

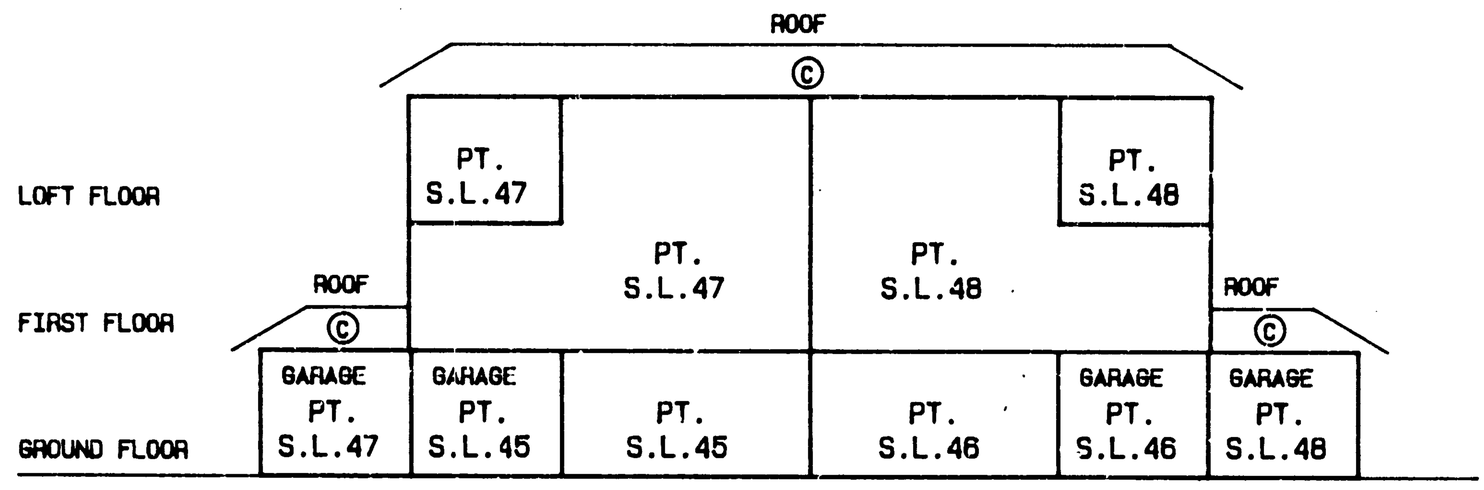

BUILDING 13

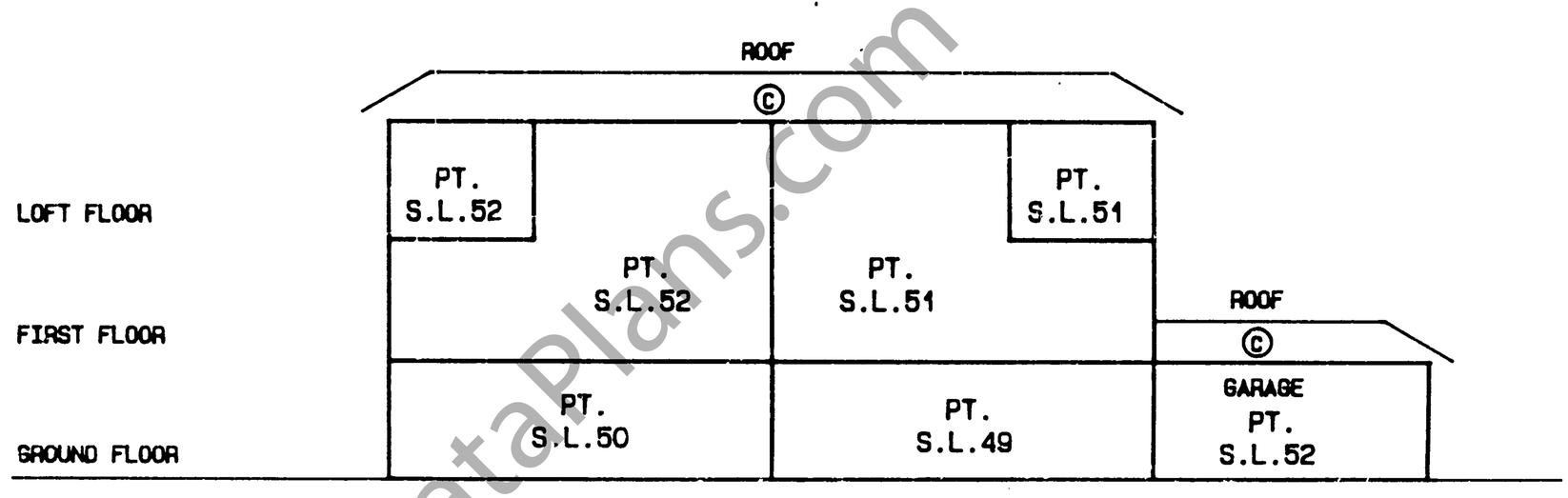

BUILDING 14

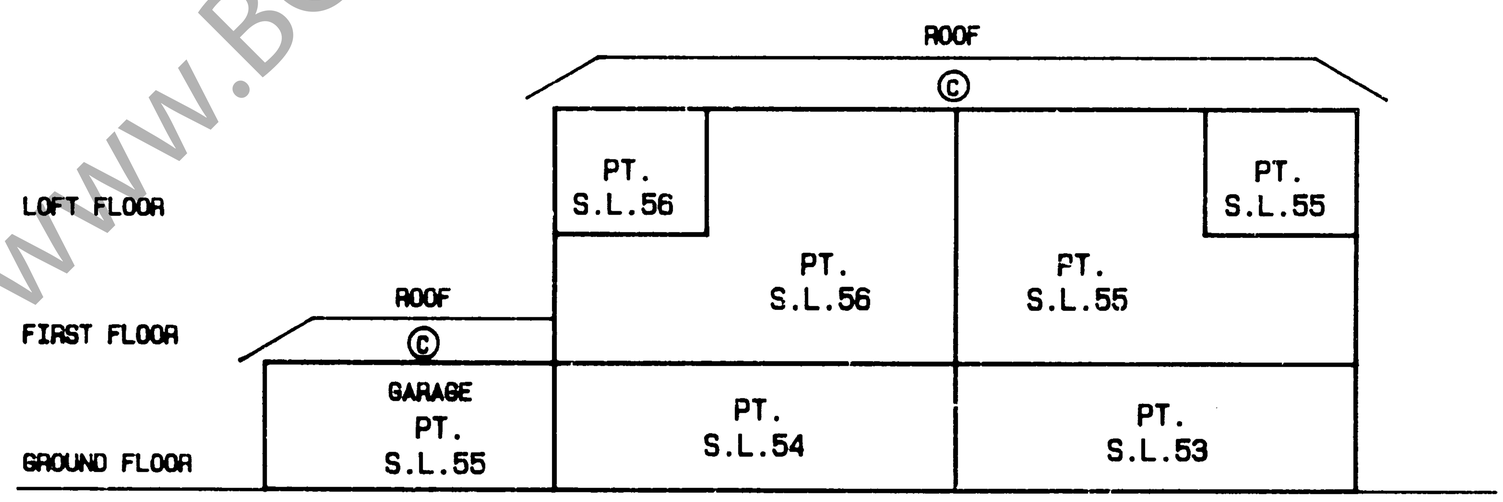

www.BCStrataPlans.com

FILE 11796S43

APRIL 17, 1990

BUILDINGS 8 TO 11
CROSS-SECTIONS B-B

STRATA PLAN N.W. 3130

SCALE 1: 200

LEGEND

PT.S.L. DENOTES PART STRATA LOT.
m^2 DENOTES SQUARE METRES.
L.C.P. DENOTES LIMITED COMMON PROPERTY.
© DENOTES COMMON PROPERTY.

BUILDING 8

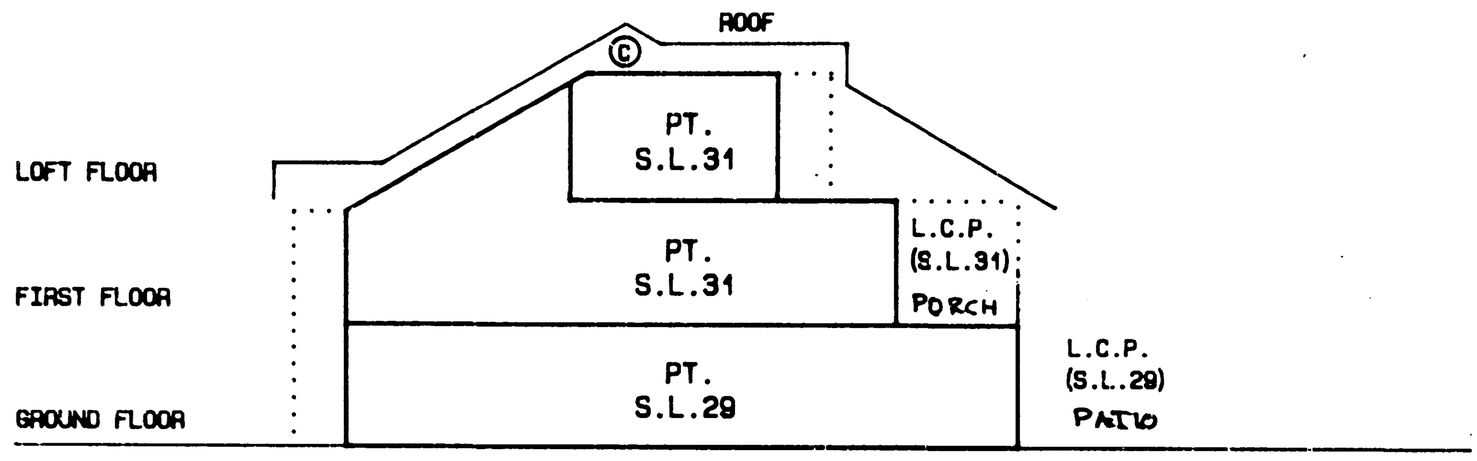

BUILDING 9

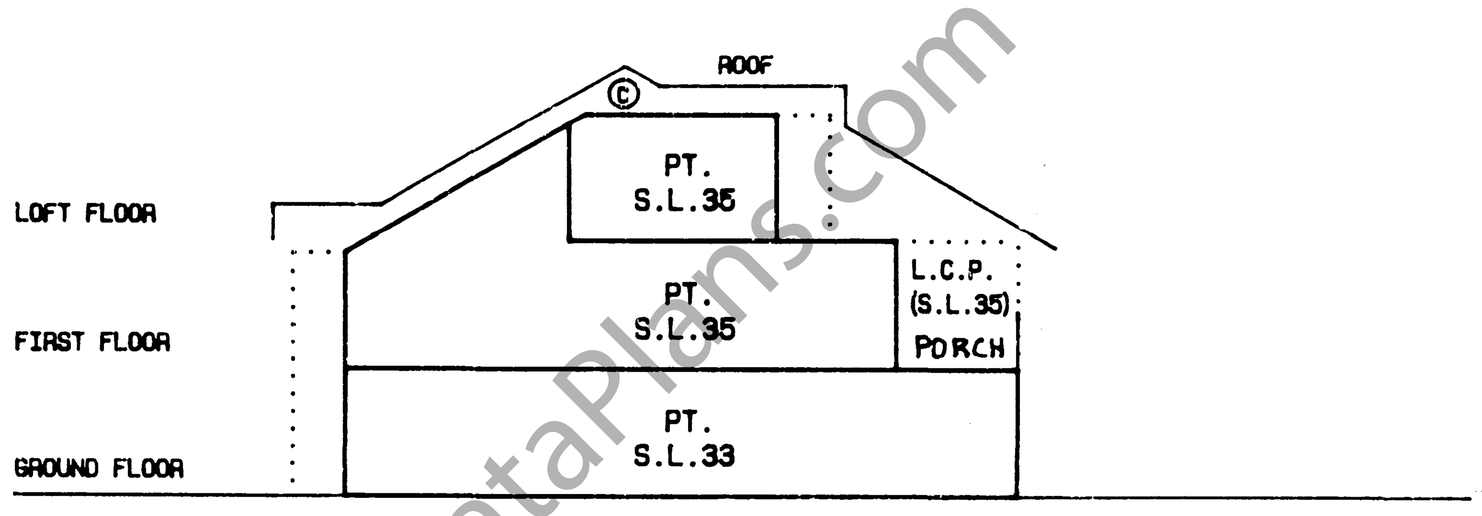

BUILDING 10

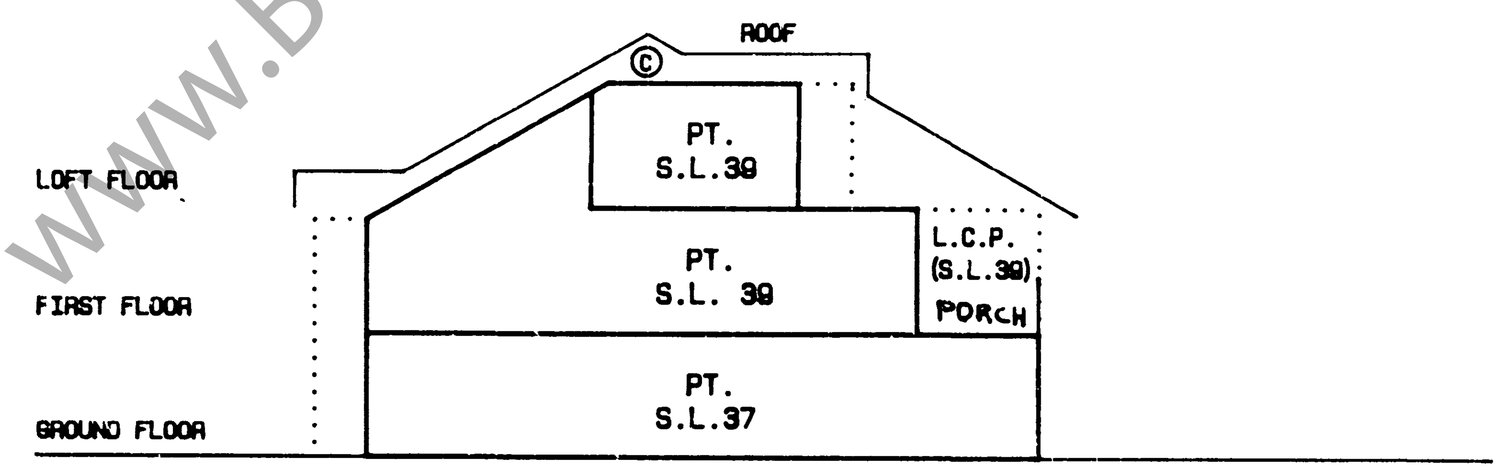

BUILDING 11

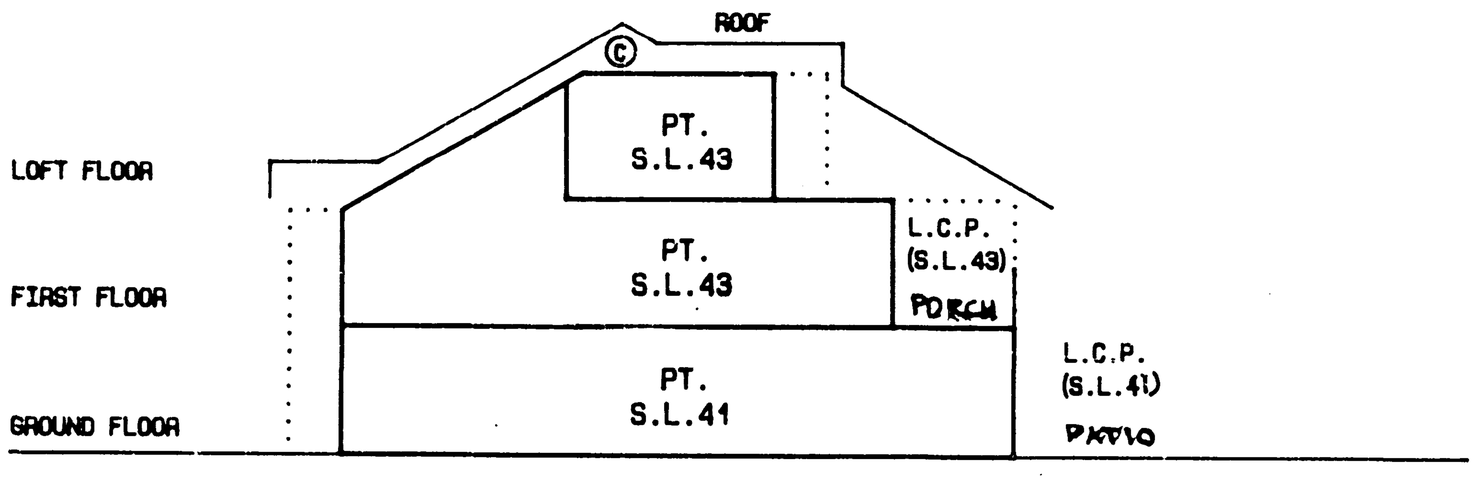

www.BCStrataPlans.com

FILE 11796S44

APRIL 17, 1990

BUILDINGS 12, 13 AND 14
CROSS-SECTIONS B-B

SCALE 1: 200

STRATA PLAN N.W. 3130

LEGEND

PT.S.L.	DENOTES PART STRATA LOT.
m^2	DENOTES SQUARE METRES.
L.C.P.	DENOTES LIMITED COMMON PROPERTY.
©	DENOTES COMMON PROPERTY.

BUILDING 12

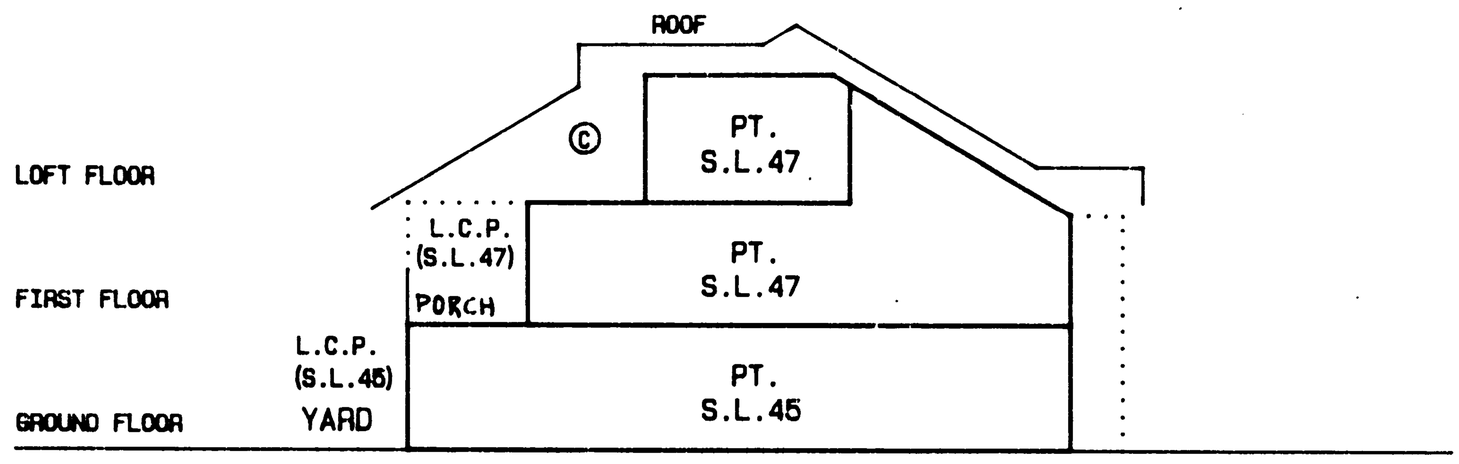

BUILDING 13

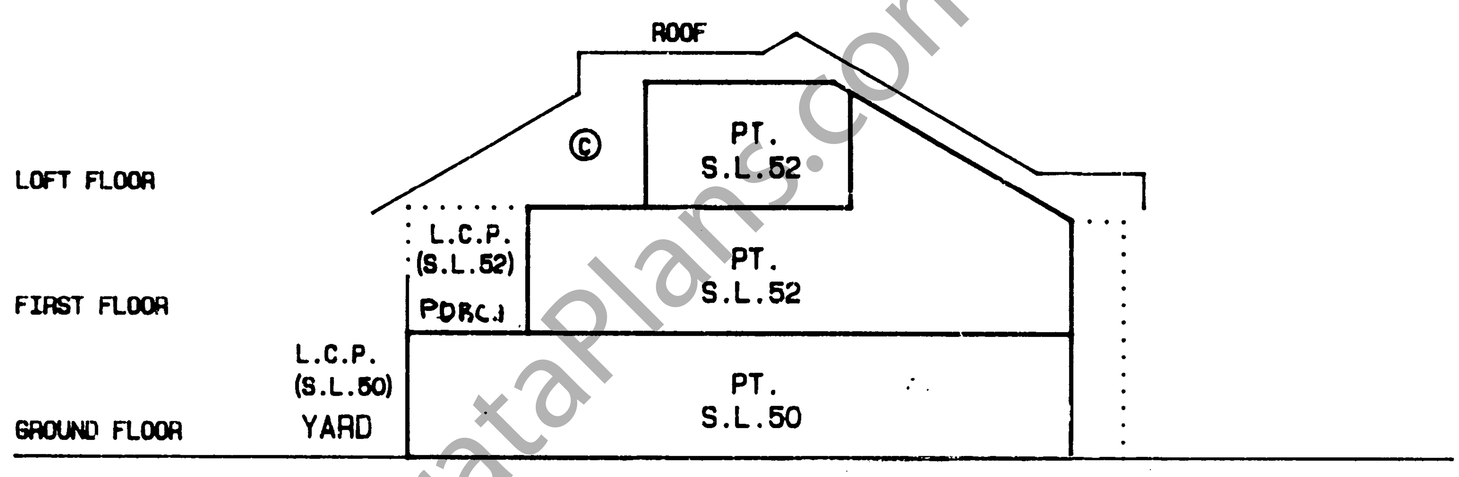

BUILDING 14

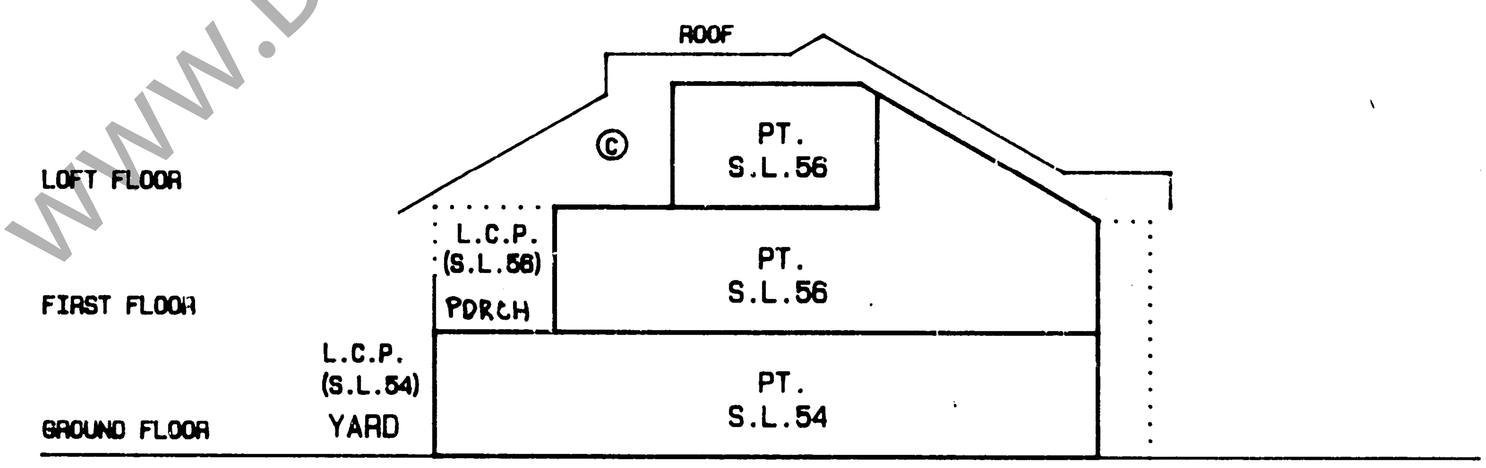

www.BCStrataPlans.com

FILE 11796S45

APRIL 17, 1990